LI-ONO-CB-4CAM-FP

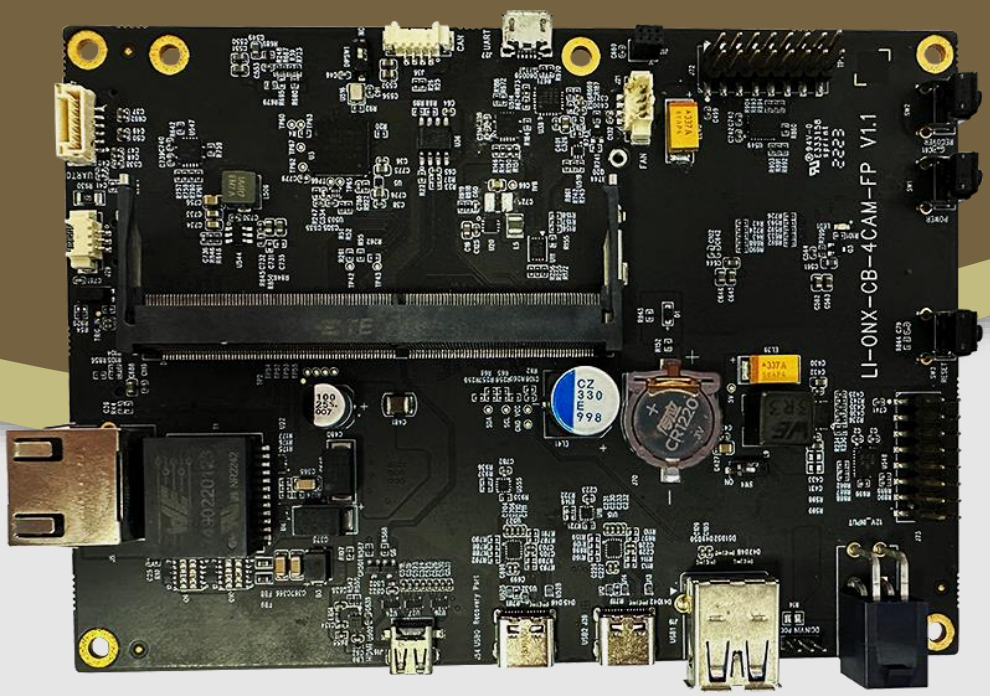

Address:

910 Auburn Ct

Fremont, CA 94538

USA

Phone:

+1 (408)263-0988

Fax:

+1 (408)217-1960

Sales:

sales@leopardimaging.com

Support:

support@leopardimaging.com

TECHNICAL FEATURES

- Carrier board for NVIDIA® Jetson Orin™ NANO SOM which power supply is 5V

  NOTE: If you are looking for carrier board for Orin NX SOM, refer to: https://leopardimaging.com/product/platform-partners/nvidia/nvidia-jetson-orin/orin-nx-cammera-kits/li-onx-cb-4cam-fp/
- 4 x MIPI CSI-2 camera interfaces (4 x 2-lane)
- 1 x Power interface (DC 12V)
- 1 x USB3.0 Type-C interface for normal use (J39)
- 1 x USB3.0 Type-C interface for recovery function only (J54)
- 1 x USB3.0 Type-A interface
- 1 x RJ45 Ethernet interface
- 1 x UART interface (USB2.0 Micro-B)
- 1 x WIFI & Bluetooth interface
- 1 x SSD connection interface
- 1 x CAN connector
- 1 x Micro HDMI interface
- 1 x Fan connector
- Auto-Boot switcher
- PoE supported (Optional)
- Weight: ~ 112 g (Without NANO SOM)
- Operating temperature: -20℃ ~ +60℃
- Part#: **LI-ONO-CB-4CAM-FP**

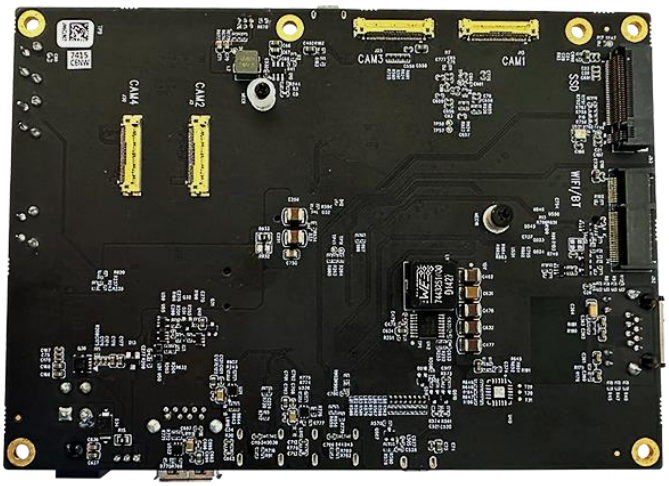

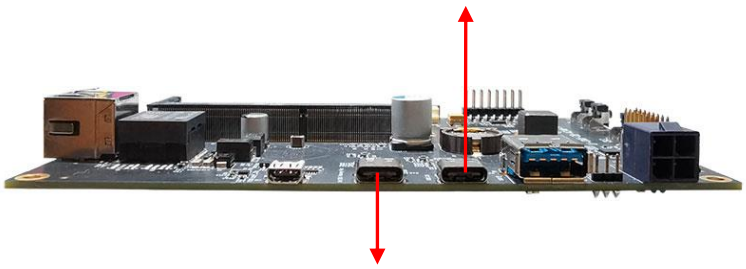

DIMENSIONS

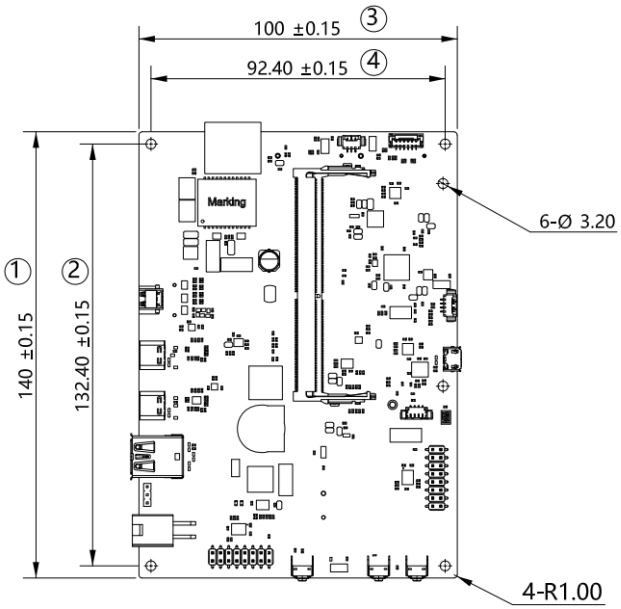

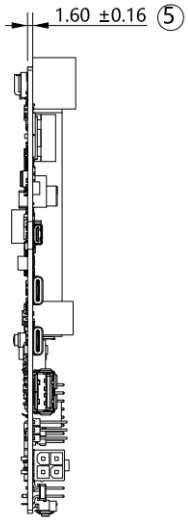

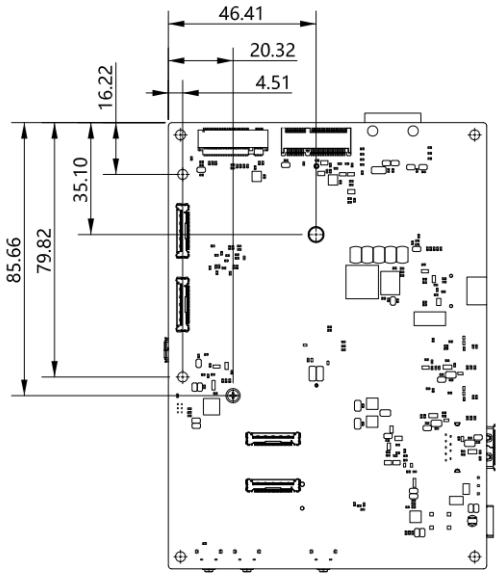

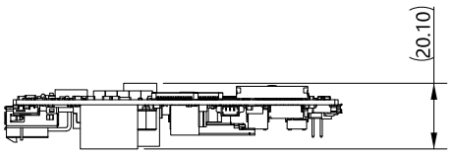

TOLERANCE TABLE					
LENGTH TOLERANCE		CHAMFER TOLERANCE		ANGLE TOLERANCE	
Size X	Tolerance	Size X	Tolerance	Size X	Tolerance
0.5 < X≤3	±0.1	0.5 < X≤3	±0.2	X≤10	±1°
3 < X≤6	±0.1	3 < X≤6	±0.5	10 < X≤50	±30'
6 < X≤30	±0.2	6 < X≤30	±1	50 < X≤120	±20'
30 < X≤120	±0.3	X > 30	±2	120 < X≤400	±10'
120 < X≤400	±0.5			X > 400	±5'
400 < X≤1000	±0.8				
X > 1000	±1.2				

NOTE:

- ⊗ marked are important sizes.
- Tolerances for others unmarked - refer to the Tolerance Table.
- All materials are compliant with RoHS requirements.

Unit: mm

BOM

#	Items	QTY	Unit
1	LI-ONX-CB-4CAM-FP V1.1 board for NANO ***NOTE***: The button cell on the board is not included	1	Piece
2	12 VDC power supply: 1 x 12V power adapter + 1 x cable adapter ***NOTE***: The cable adapter is for testing only	1	Set

BUTTON CELL (**NOT** included in the Product)

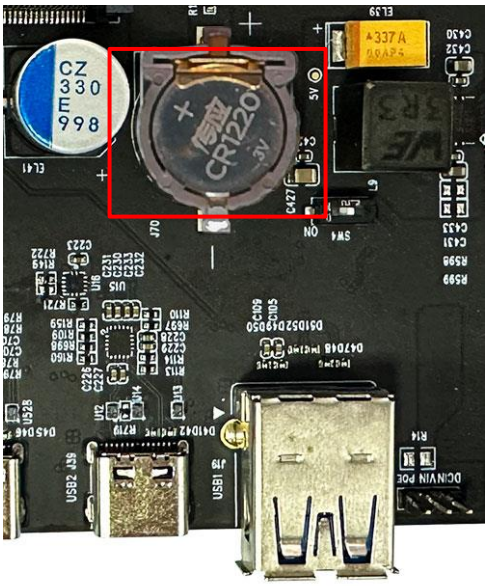

Power: 3V

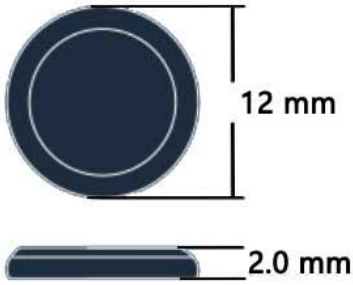

NOTE: The button cell shown above is only for your reference. Please buy according to your actual requirements.

INTERFACE OF J13 ((MIPI Channel 1)

- Part#: 20525-030E-02
- Number of Positions: 30
- Pitch: 0.4 mm
- Mating I-PEX Cable: FAW-1233-xx

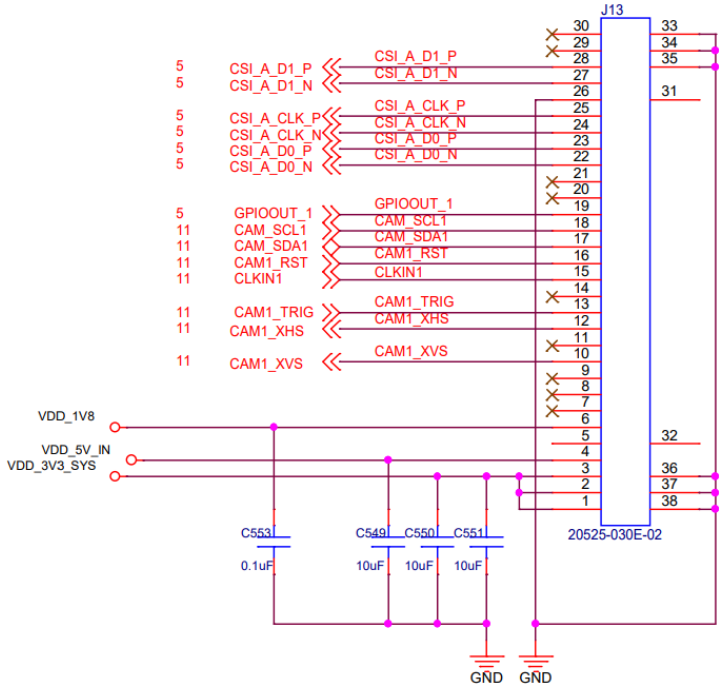

PINOUT DETAILS OF IPEX CONNECTOR J13

Pin No	Pin Name	Description	Pin Type	Voltage Level
1	VDD_3V3_SYS	Power supply	Power	3.3V
2	VDD_3V3_SYS	Power supply	Power	3.3V
3	VDD_3V3_SYS	Power supply	Power	3.3V
4	VDD_5V_IN	Power supply	Power	5V
5	-	-	-	-
6	VDD_1V8	Power supply	Power	1.8V
7	-	-	-	-
8	-	-	-	-
9	-	-	-	-
10	CAM1_XVS	Vertical synchronization	Bidir	1.8V
11	-	-	-	-
12	CAM1_XHS	Horizontal synchronization	Bidir	1.8V
13	CAM1_TRIG	Trigger signal	Bidir	1.8V
14	-	-	-	-

Pin No	Pin Name	Description	Pin Type	Voltage Level
15	CLKIN1	Clock input	Input	1.8V
16	CAM1_RST	Reset signal	Output	1.8V
17	CAM_SDA1	The SDA signal of camera I2C	Bidir	1.8V
18	CAM_SCL1	The SCL signal of camera I2C	Bidir	1.8V
19	GPIOOUT_1	GPIO signal	Bidir	1.8V
20	-	-	-	-
21	-	-	-	-
22	CSI_A_D0_N	N signal of the D0 A-port differential signal of MIPI	Bidir	1.8V
23	CSI_A_D0_P	P signal of the D0 A-port differential signal of MIPI	Bidir	1.8V
24	CSI_A_CLK_N	N signal of the A-port CLOCK differential signal of MIPI	Bidir	1.8V
25	CSI_A_CLK_P	P signal of the A-port CLOCK differential signal of MIPI	Bidir	1.8V
26	GND	GND	-	-
27	CSI_A_D1_N	N signal of the D1 A-port differential signal of MIPI	Bidir	1.8V
28	CSI_A_D1_P	P signal of the D1 A-port differential signal of MIPI	Bidir	1.8V
29	-	-	-	-
30	-	-	-	-

INTERFACE J3 (MIPI Channel 2)

- Part#: 20525-030E-02
- Number of Positions: 30
- Pitch: 0.4 mm
- Mating I-PEX Cable: FAW-1233-xx

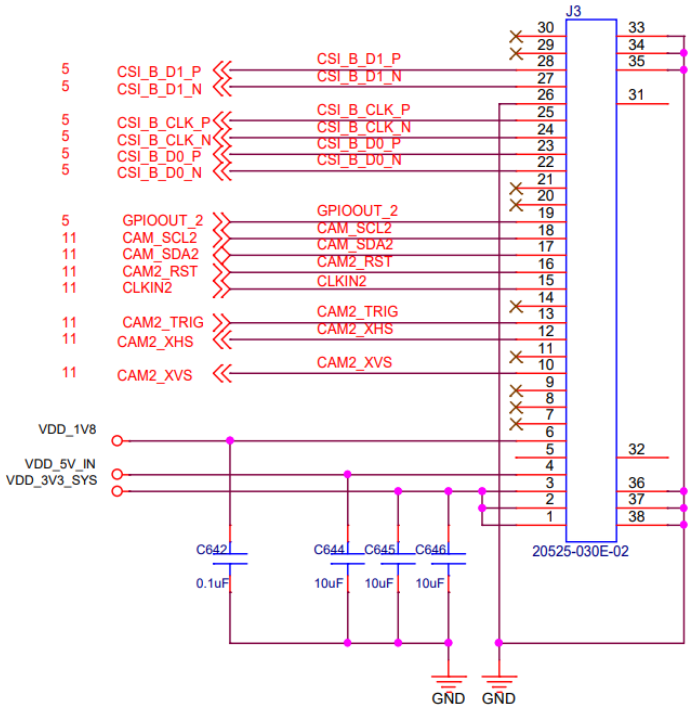

PINOUT DETAILS OF IPEX CONNECTOR J3

Pin No	Pin Name	Description	Pin Type	Voltage Level
1	VDD_3V3_SYS	Power supply	Power	3.3V
2	VDD_3V3_SYS	Power supply	Power	3.3V
3	VDD_3V3_SYS	Power supply	Power	3.3V
4	VDD_5V_IN	Power supply	Power	5V
5	-	-	-	-
6	VDD_1V8	Power supply	Power	1.8V
7	-	-	-	-
8	-	-	-	-
9	-	-	-	-
10	CAM2_XVS	Vertical synchronization	Bidir	1.8V
11	-	-	-	-
12	CAM2_XHS	Horizontal synchronization	Bidir	1.8V
13	CAM2_TRIG	Trigger signal	Bidir	1.8V
14	-	-	-	
15	CLKIN2	Clock input	Input	1.8V
16	CAM2_RST	Reset signal	Output	1.8V
17	CAM_SDA2	The SDA signal of camera I2C	Bidir	1.8V
18	CAM_SCL2	The SCL signal of camera I2C	Bidir	1.8V
19	GPIOOUT_2	GPIO signal	Bidir	1.8V
20	-	-	-	
21	-	-	-	
22	CSI_B_D0_N	N signal of the D0 B-port differential signal of MIPI	Bidir	1.8V
23	CSI_B_D0_P	P signal of the D0 B-port differential signal of MIPI	Bidir	1.8V
24	CSI_B_CLK_N	N signal of the B-port CLOCK differential signal of MIPI	Bidir	1.8V
25	CSI_B_CLK_P	P signal of the B-port CLOCK differential signal of MIPI	Bidir	1.8V
26	GND	GND	-	-
27	CSI_B_D1_N	N signal of the D1 B-port differential signal of MIPI	Bidir	1.8V
28	CSI_B_D1_P	P signal of the D1 B-port differential signal of MIPI	Bidir	1.8V
29	-	-	-	-
30	-	-	-	-

INTERFACE J25 (MIPI Channel 3)

- Part#: 20525-030E-02
- Number of Positions: 30
- Pitch: 0.4 mm
- Mating I-PEX Cable: FAW-1233-xx

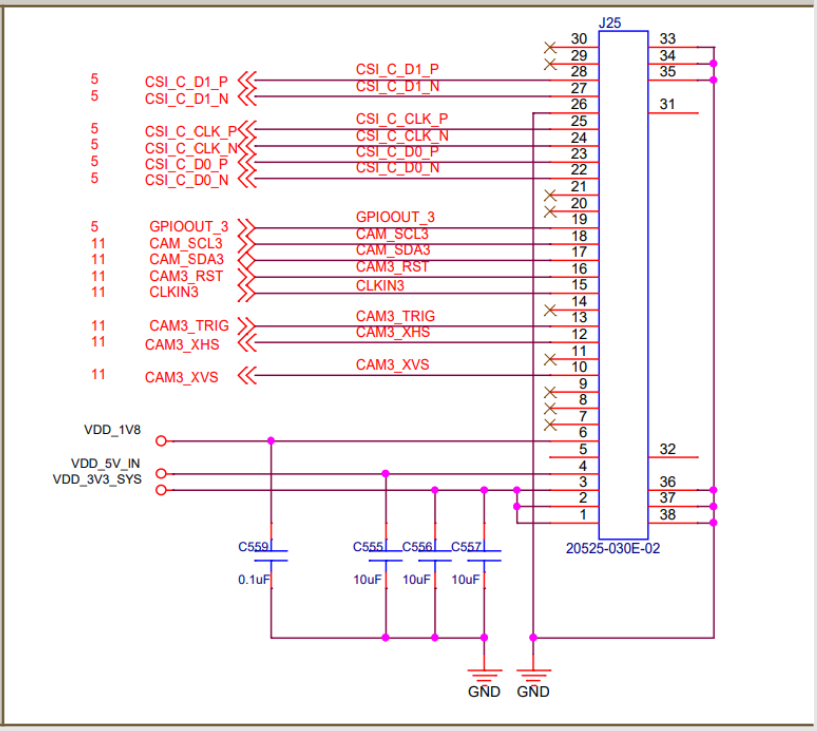

PINOUT DETAILS OF IPEX CONNECTOR J25

Pin No	Pin Name	Description	Pin Type	Voltage Level
1	VDD_3V3_SYS	Power supply	Power	3.3V
2	VDD_3V3_SYS	Power supply	Power	3.3V
3	VDD_3V3_SYS	Power supply	Power	3.3V
4	VDD_5V_IN	Power supply	Power	5V
5	-	-	-	-
6	VDD_1V8	Power supply	Power	1.8V
7	-	-	-	-
8	-	-	-	-
9	-	-	-	-
10	CAM3_XVS	Vertical synchronization	Bidir	1.8V
11	-	-	-	-
12	CAM3_XHS	Horizontal synchronization	Bidir	1.8V
13	CAM3_TRIG	Trigger signal	Bidir	1.8V
14	-	-	-	

Pin No	Pin Name	Description	Pin Type	Voltage Level
15	CLKIN3	Clock input	Input	1.8V
16	CAM3_RST	Reset signal	Output	1.8V
17	CAM_SDA3	The SDA signal of camera I2C	Bidir	1.8V
18	CAM_SCL3	The SCL signal of camera I2C	Bidir	1.8V
19	GPIOOUT_3	GPIO signal	Bidir	1.8V
20	-	-	-	
21	-	-	-	
22	CSI_C_D0_N	N signal of the D0 C-port differential signal of MIPI	Bidir	1.8V
23	CSI_C_D0_P	P signal of the D0 C-port differential signal of MIPI	Bidir	1.8V
24	CSI_C_CLK_N	N signal of the C-port CLOCK differential signal of MIPI	Bidir	1.8V
25	CSI_C_CLK_P	P signal of the C-port CLOCK differential signal of MIPI	Bidir	1.8V
26	GND	GND	-	-
27	CSI_C_D1_N	N signal of the D1 C-port differential signal of MIPI	Bidir	1.8V
28	CSI_C_D1_P	P signal of the D1 C-port differential signal of MIPI	Bidir	1.8V
29	-	-	-	-
30	-	-	-	-

INTERFACE J30 (MIPI Channel 4)

- Part#: 20525-030E-02
- Number of Positions: 30
- Pitch: 0.4 mm
- Mating I-PEX Cable: FAW-1233-xx

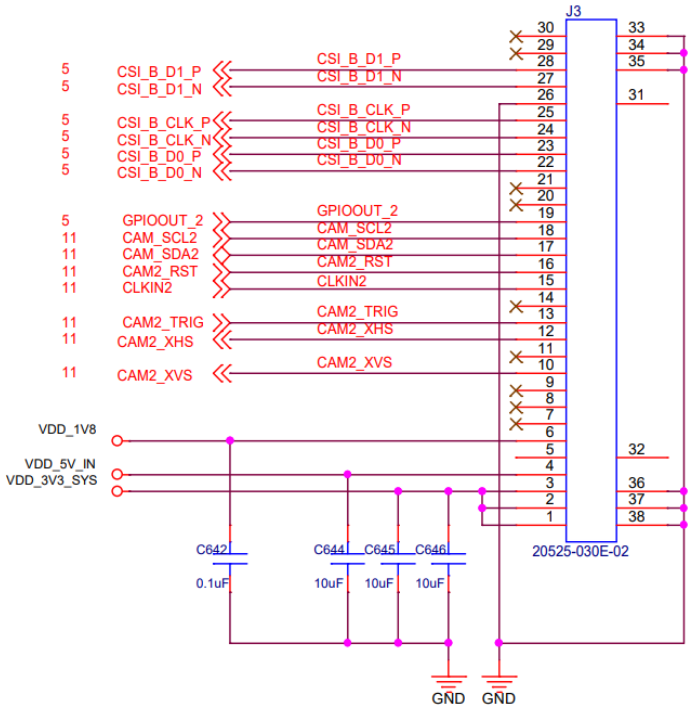

PINOUT DETAILS OF IPEX CONNECTOR J30

Pin No	Pin Name	Description	Pin Type	Voltage Level
1	VDD_3V3_SYS	Power supply	Power	3.3V
2	VDD_3V3_SYS	Power supply	Power	3.3V
3	VDD_3V3_SYS	Power supply	Power	3.3V
4	VDD_5V_IN	Power supply	Power	5V
5	-	-	-	-
6	VDD_1V8	Power supply	Power	1.8V
7	-	-	-	-
8	-	-	-	-
9	-	-	-	-
10	CAM4_XVS	Vertical synchronization	Bidir	1.8V
11	-	-	-	-
12	CAM4_XHS	Horizontal synchronization	Bidir	1.8V
13	CAM4_TRIG	Trigger signal	Bidir	1.8V
14	-	-	-	
15	CLKIN4	Clock input	Input	1.8V
16	CAM4_RST	Reset signal	Output	1.8V
17	CAM_SDA4	The SDA signal of camera I2C	Bidir	1.8V
18	CAM_SCL4	The SCL signal of camera I2C	Bidir	1.8V
19	GPIOOUT_4	GPIO signal	Bidir	1.8V
20	-	-	-	
21	-	-	-	
22	CSI_D_D0_N	N signal of the D0 D-port differential signal of MIPI	Bidir	1.8V
23	CSI_D_D0_P	P signal of the D0 D-port differential signal of MIPI	Bidir	1.8V
24	CSI_D_CLK_N	N signal of the D-port CLOCK differential signal of MIPI	Bidir	1.8V
25	CSI_D_CLK_P	P signal of the D-port CLOCK differential signal of MIPI	Bidir	1.8V
26	GND	GND	-	-
27	CSI_D_D1_N	N signal of the D1 D-port differential signal of MIPI	Bidir	1.8V
28	CSI_D_D1_P	P signal of the D1 D-port differential signal of MIPI	Bidir	1.8V
29	-	-	-	-
30	-	-	-	-

IO CONNECTOR J72

- Part#: M20-8760842P
- Number of Positions: 16
- Number of Rows: 2
- Pitch: 2.54 mm
- IO Voltage Level: 3.3V

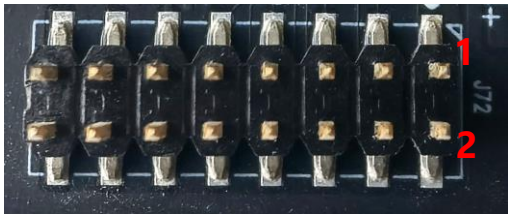

PINOUT DETAILS OF J72

Pin No	Pin Name	Description	Pin Type	Voltage Level
1	VDD_3V3_SYS	Power supply	Power	3.3V
2	VDD_3V3_SYS	Power supply	Power	3.3V
3	GEN2_I2C_SCL	The clock of SOM's I2C1	Bidir	3.3V
4	SPI2_SCK_LS	The SPI2 clock of the SOM converted by the level-converted chip	Bidir	3.3V
5	GEN2_I2C_SDA	The data of SOM's I2C1	Bidir	3.3V
6	SPI2_MISO_LS	The SPI2 MISO of the SOM converted by the level-converted chip	Input	3.3V
7	SYS_RST_IN	SYS_RST_IN of the SOM	Input	3.3V
8	SPI2_MOSI_LS	The SPI2 MOSI of the SOM converted by the level-converted chip	Output	3.3V
9	SPI2_CS1_LS	The SPI2 CS1 of the SOM converted by the level-converted chip	Output	3.3V
10	SPI2_CS0_LS	The SPI2 CS0 of the SOM converted by the level-converted chip	Output	3.3V
11	GND	GND	-	-
12	GND	GND	-	-
13	-	-	-	-
14	-	-	-	-
15	-	-	-	-
16	-	-	-	-

IO CONNECTOR J73

- Part#: M20-8760842P
- Number of Positions: 16
- Number of Rows: 2
- Pitch: 2.54 mm
- IO Voltage Level: 3.3V

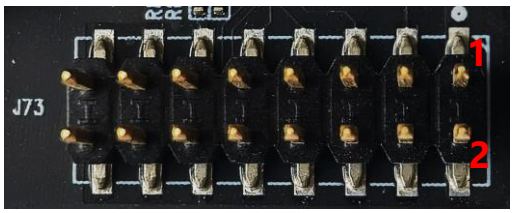

PINOUT DETAILS OF J73

Pin No	Pin Name	Description	Pin Type	Voltage Level
1	VDD_3V3_SYS	Power supply	Power	3.3V
2	VDD_3V3_SYS	Power supply	Power	3.3V
3	I2S0_DOUT_LS	The I2S0 data out of the SOM converted by the level-converted chip	Output	3.3V
4	GPIO_OUT	The FAN_PWM signal of the SOM converted by the level-converted chip	Output	3.3V
5	I2S0_DIN_LS	The I2S0 data in of the SOM converted by the level-converted chip	Input	3.3V
6	MOD_SLEEP_OUT	The module sleep signal of the SOM converted by the level-converted chip	Output	3.3V
7	I2S0_FS_LS	The I2S0 sample frequency of the SOM converted by the level-converted chip	Output	3.3V
8	-	-	-	-
9	I2S0_SCLK_LS	The I2S0 sclk of the SOM converted by the level-converted chip	Bidir	3.3V
10	-	-	-	-
11	GND	GND	-	-
12	GND	GND	-	-
13	-	-	-	-
14	-	-	-	-
15	-	-	-	-
16	-	-	-	-

UART PORT J27 (USB2.0 Micro-B)

- USB2.0 UART bridge integrated

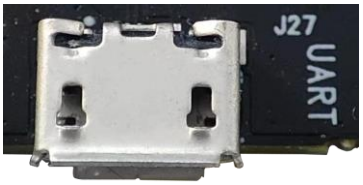

UART PORT J17

- Part#: BM06B-GHS-TB
- Number of Positions: 6
- Number of Rows: 1
- Pitch: 1.25 mm

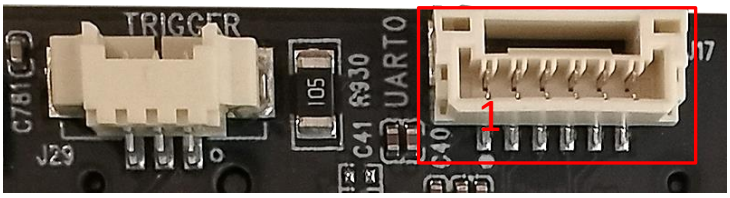

PINOUT DETAILS OF J17

Pin No	Pin Name	Description	Pin Type	Voltage Level
1	VDD_5V_IN	5V IN	Power	5V
2	UART0_TXD_3V3	The TXD of UART0	Bidir	3.3V
3	UART0_RXD_3V3	The RXD of UART0	Bidir	3.3V
4	UART0_CTS_3V3	The CTS of UART0	Bidir	3.3V
5	UART0_RTS_3V3	The RTS of UART0	Bidir	3.3V
6	GND	GND	-	-

INTERFACE J29 (External Trigger Input)

- Part#: 532610371
- Number of Positions: 3
- Number of Rows: 1
- Pitch: 1.25 mm

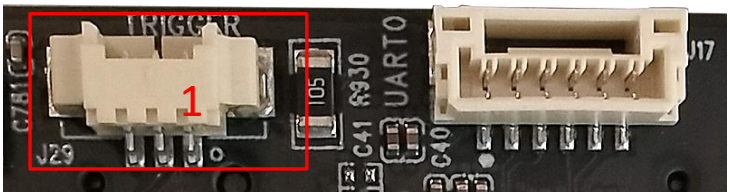

PINOUT DETAILS OF J29

Pin No	Pin Name	Description	Pin Type	Voltage Level
1	GND_OC	GND_OC	Input	-
2	TRIG_IN	External TRIG IN	Input	3.3V
3	GND_OC	GND_OC	Input	-

BOOT MODE (SW4)

Status	Boot Mode
On	Manual Mode
Off	Auto Mode

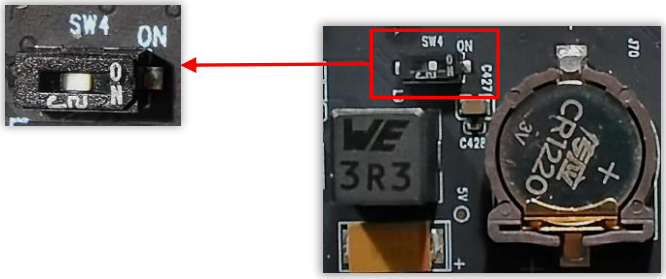

Buttons (Power, Recovery, Reset)

Buttons	Function
SW1	Power
SW2	Force recovery
SW3	System reset

INTERFACE J36 (CAN Connector)

- Part#: BM04B-GHS-TB

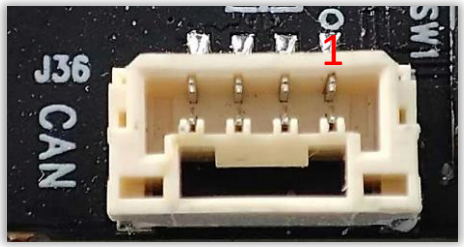

PINOUT DETAILS OF J36

Pin No	Pin Name	Description	Pin Type	Voltage Level
1	VDD_5V_IN	5V IN	Power	5V
2	CANH	The high signal of the CAN sends and receives chip	Bidir	5V
3	CANL	The low signal of the CAN sends and receives chip	Bidir	5V
4	GND	GND	-	-
5	GND	GND	-	-
6	GND	GND	-	-

INTERFACE J6 (Power Input Connector)

- Part#: 1724480004
- Number of Positions: 4
- Number of Rows: 2
- Pitch: 4.20 mm

PINOUT DETAILS OF J6

Pin No	Pin Name	Description	Pin Type	Voltage Level
1	DCDC_IN	Power 12V	Power_In	12V
2	DCDC_IN	Power 12V	Power_In	12V
3	GND	GND	Power_Gnd	-
4	GND	GND	Power_Gnd	-

INTERFACE J21 (SoC Fan Header)

- Part#: 0533980471
- Number of Positions: 4
- Number of Rows: 1
- Pitch: 1.25 mm

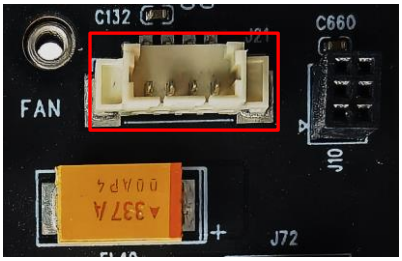

PINOUT DETAILS OF J21

Pin No	Pin Name	Description	Pin Type	Voltage Level
1	GND	GND	-	-
2	PWR	SoC Fan power supply	Power	5V
3	TACH	Speed control of the SOC FAN	Output	5V
4	PWM	Pulse Width Modulation of the SOC FAN	Output	5V
5	GND	GND	-	-
6	GND	GND	-	-

INTERFACE J11 (Jumper for Main Power)

- Part#: M22-2010305
- Number of Positions: 3
- Number of Rows: 1

Without Jumper:

With Jumper:

DCDC

POE

PINOUT DETAILS OF J11

Pin No	Pin Name	Description	Pin Type	Voltage Level
1	15V	Power 15V	Power In	15V
2	VIN	Power	Power	-
3	DCDC_IN	Power 12V	Power In	12V

INTERFACE J53 (PCIe x4 Based M.2 M Connector for SSD)

- Part#: SM3ZS067U410AMR1000
- Number of Positions: 67
- Number of Rows: 2
- Pitch: 0.50 mm

INTERFACE J52 (M.2 Key E Connector for WIFI & Bluetooth)

- Part#: 246411067401894E
- Number of Positions: 67
- Number of Rows: 2
- Pitch: 0.50 mm

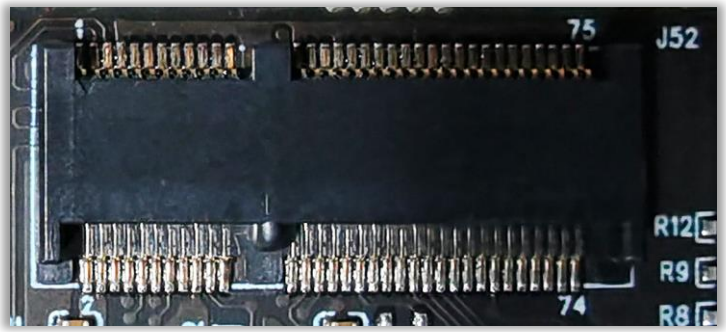

INTERFACE J10 (JTAG Header)

- Part#: 20021311-00006T4LF
- Number of Rows: 2
- Pitch: 1.27 mm
- Number of Positions: 6
- Pin Assignment

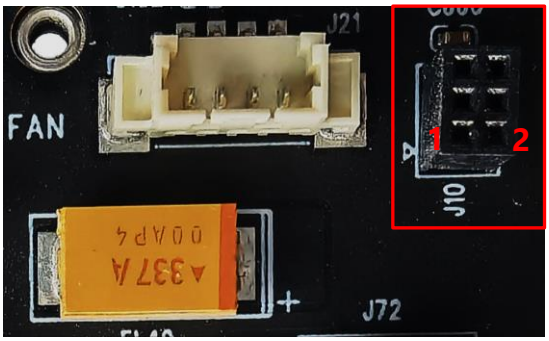

PINOUT DETAILS OF J10

Pin No	Pin Name	Description	Pin Type	Voltage Level
1	JTAG_TDO	JTAG test data output	Output	3.3V
2	JTAG_TMS	JTAG test mode selection	Bidir	3.3V
3	JTAG_TDI	JTAG test data input	Input	3.3V
4	JTAG_TCK	JTAG test clock	Bidir	3.3V
5	VCCIO1	JTAG power supply	Power	3.3V
6	GND	GND	-	-

Connector to NVIDIA® Jetson Orin™ NANO SOM

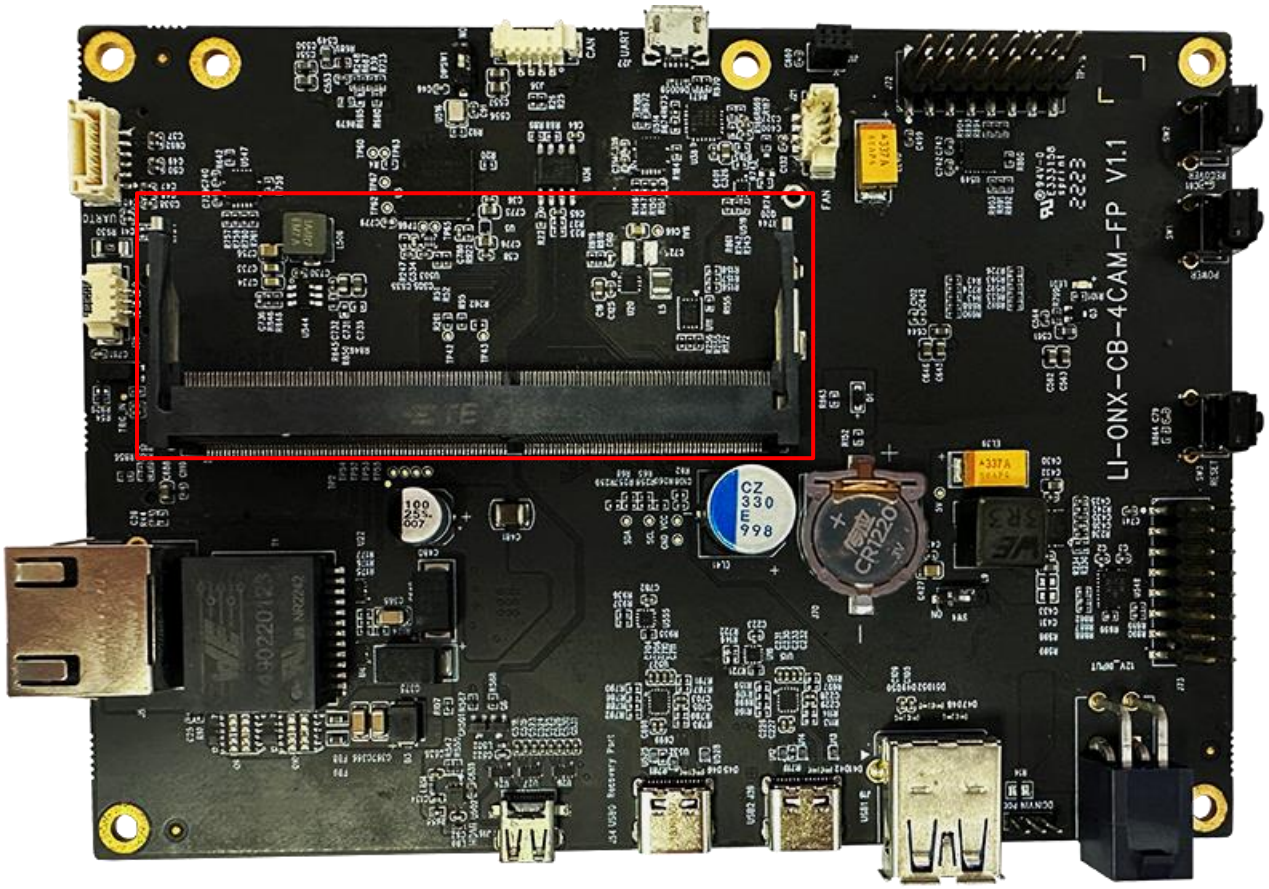

NOTE:

NVIDIA® Jetson Orin™ NANO SOM is not included

REVISION HISTORY

Revision	Description	Release Date
1.0	First Release.	30 Apr 2024

910 Auburn Ct, Fremont, CA 94538, USA
Phone: +1 (408)263-0988
Fax: +1 (408)217-1960
Email: sales@leopardimaging.com
Website: www.leopardimaging.com