LI-XAVIER-KIT-IMX577M12-X

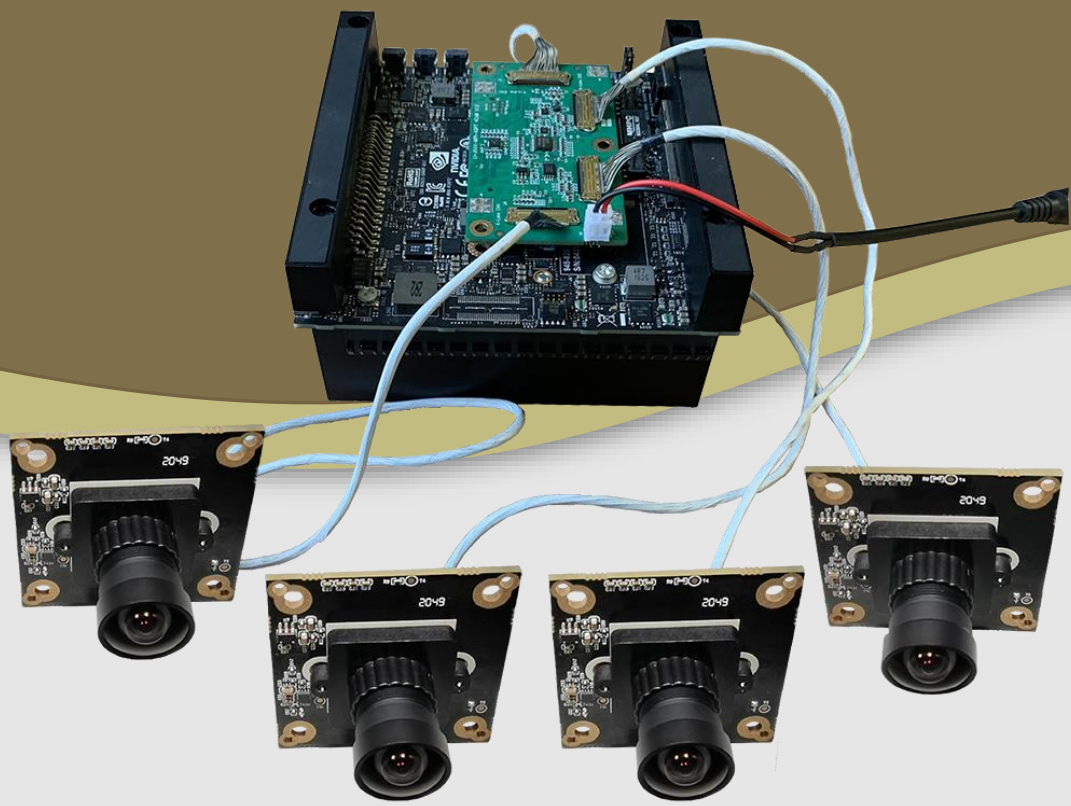

Address:
910 Auburn Ct
Fremont, CA 94538
USA

Phone:
+1 (408)263-0988
Fax:
+1 (408)217-1960

Sales:
sales@leopardimaging.com
Support:
support@leopardimaging.com

KEY FEATURES

- Compatible with Nvidia® Jetson AGX Xavier™ Developer Kit
- MIPI CSI-2 interface
- Supports up to six cameras
- Two adapter board options:
  LI-JXAV-MIPI-ADPT-4CAM
  LI-JXAV-MIPI-ADPT-6CAM-FP
- Sensor: Diagonal 7.857 mm (Type 1/2.3) 12.3MP CMOS image sensor IMX577
- Active pixels: 4056 (H) x 3040 (V)
- Color camera
- Length of the I-PEX cable: ~ 300 mm
- Supports multiple length cables
- Connector Part#: 20525-030E-02
- Allows customization
- Part#: LI-XAVIER-KIT-IMX577M12-X

1 Cam	LI-XAVIER-KIT-IMX577M12
2 Cam	LI-XAVIER-KIT-IMX577M12-D
3 Cam	LI-XAVIER-KIT-IMX577M12-T
4 Cam	LI-XAVIER-KIT-IMX577M12-Q
6 Cam	LI-XAVIER-KIT-IMX577M12-H

LENS SPECIFICATIONS

Effective Focal Length	3.25 mm ± 5%
Aperture, F/#	2.60 ± 5%
Field of View (FOV)	101.6˚ diagonal
	88.5˚ horizontal
	71.6˚ vertical
TV Distortion	< -0.6%
Relative Illumination	> 58.98%
IR Filter	650 nm IR cut filter
Lens Mount	M12 x P0.5

BOM

#	Items	QTY
1	LI-JXAV-MIPI-ADPT-4CAM or LI-JXAV-MIPI-ADPT-6CAM-FP	1
2	LI-IMX577-MIPI-M12	1, 2, 3, 4 or 6
3	FAW-1233-03 cable	1, 2, 3, 4 or 6

NOTE:
Nvidia® Jetson AGX Xavier™ Developer Kit is **NOT** included.

APPLICATIONS

- Industrial Applications
- Intelligent Transportation System (ITS) Cameras

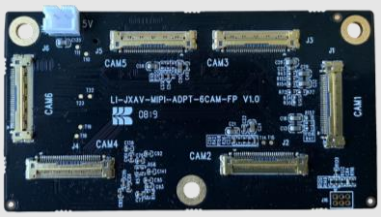

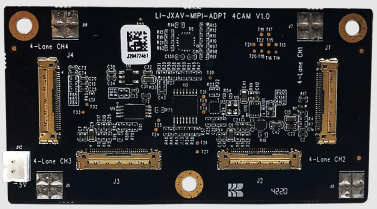

BOM DETAILS

LI-XAVIER-KIT-IMX577M12

#	Items	QTY
1	LI-JXAV-MIPI-ADPT-**4CAM**	1
2	LI-IMX577-MIPI-M12	1
3	FAW-1233-03 cable	1

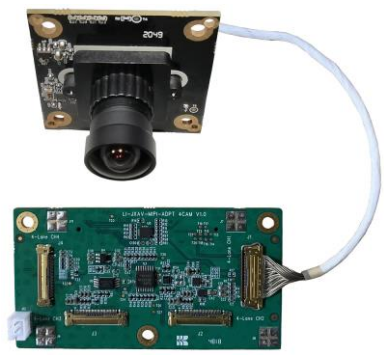

LI-XAVIER-KIT-IMX577M12-D

#	Items	QTY
1	LI-JXAV-MIPI-ADPT-**4CAM**	1
2	LI-IMX577-MIPI-M12	2
3	FAW-1233-03 cable	2

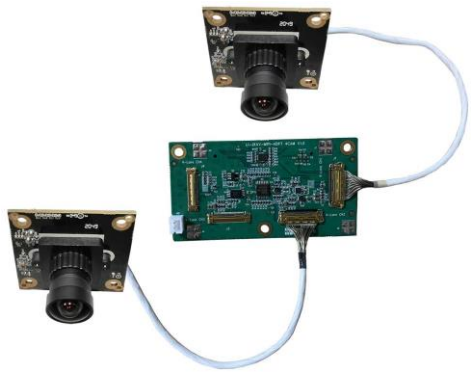

LI-XAVIER-KIT-IMX577M12-T

#	Items	QTY
1	LI-JXAV-MIPI-ADPT-**4CAM**	1
2	LI-IMX577-MIPI-M12	3
3	FAW-1233-03 cable	3

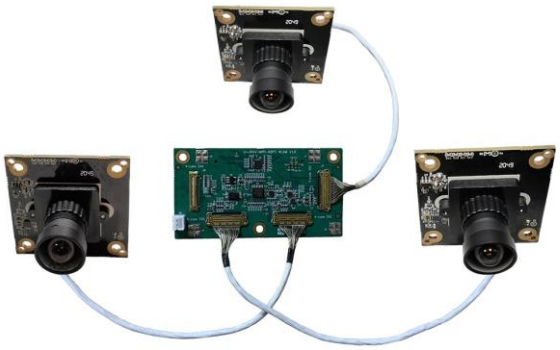

LI-XAVIER-KIT-IMX577M12-Q

#	Items	QTY
1	LI-JXAV-MIPI-ADPT-**4CAM**	1
2	LI-IMX577-MIPI-M12	4
3	FAW-1233-03 cable	4

BOM DETAILS

LI-XAVIER-KIT-IMX577M12-6CAM-Q

#	Items	QTY
1	LI-JXAV-MIPI-ADPT-**6CAM-FP**	1
2	LI-IMX577-MIPI-M12	4
3	FAW-1233-03 cable	4

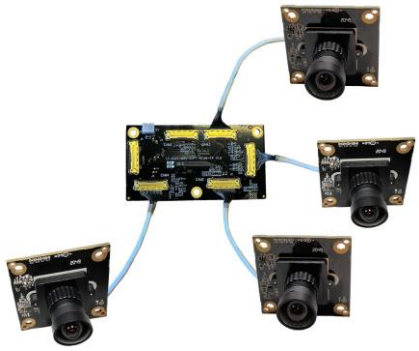

LI-XAVIER-KIT-IMX577M12-H

#	Items	QTY
1	LI-JXAV-MIPI-ADPT-**6CAM-FP**	1
2	LI-IMX577-MIPI-M12	6
3	FAW-1233-03 cable	6

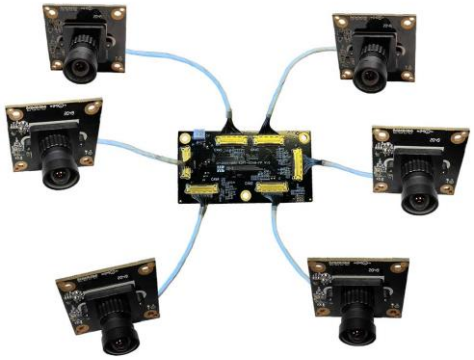

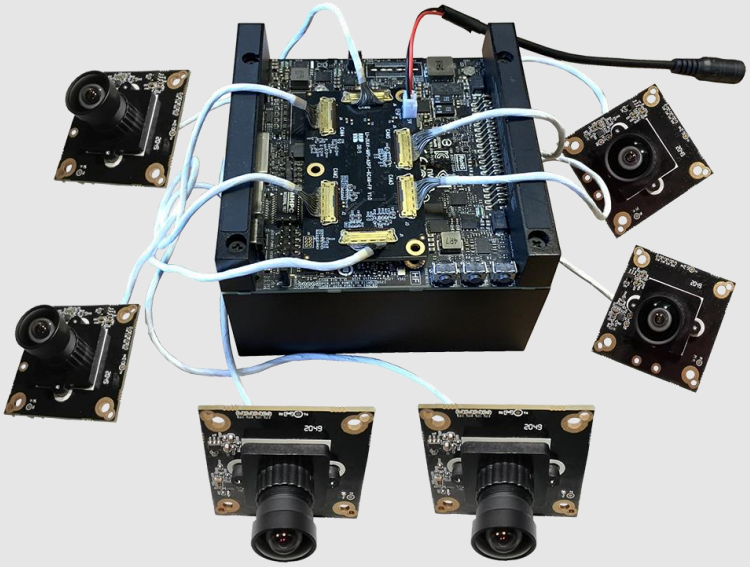

LI-JXAV-MIPI-ADPT-4CAM

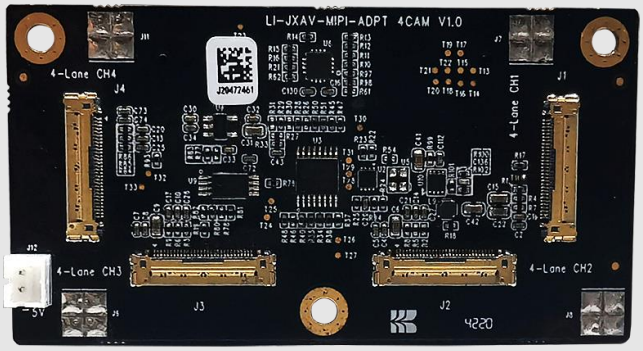

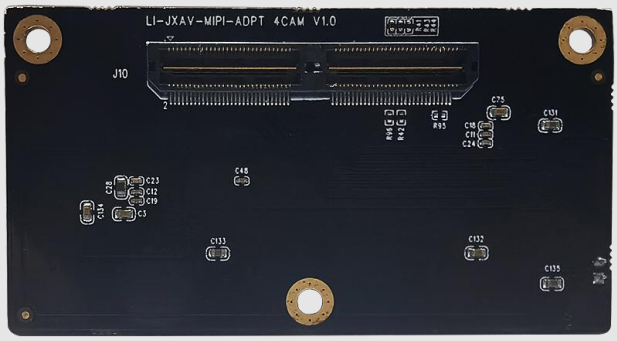

INTERFACES

Interface J1 (Camera Channel 1)

- Part#: 20525-030E-02
- Number of Positions: 30
- Pitch: 0.4 mm
- Mating I-PEX Cable: FAW-1233-XX

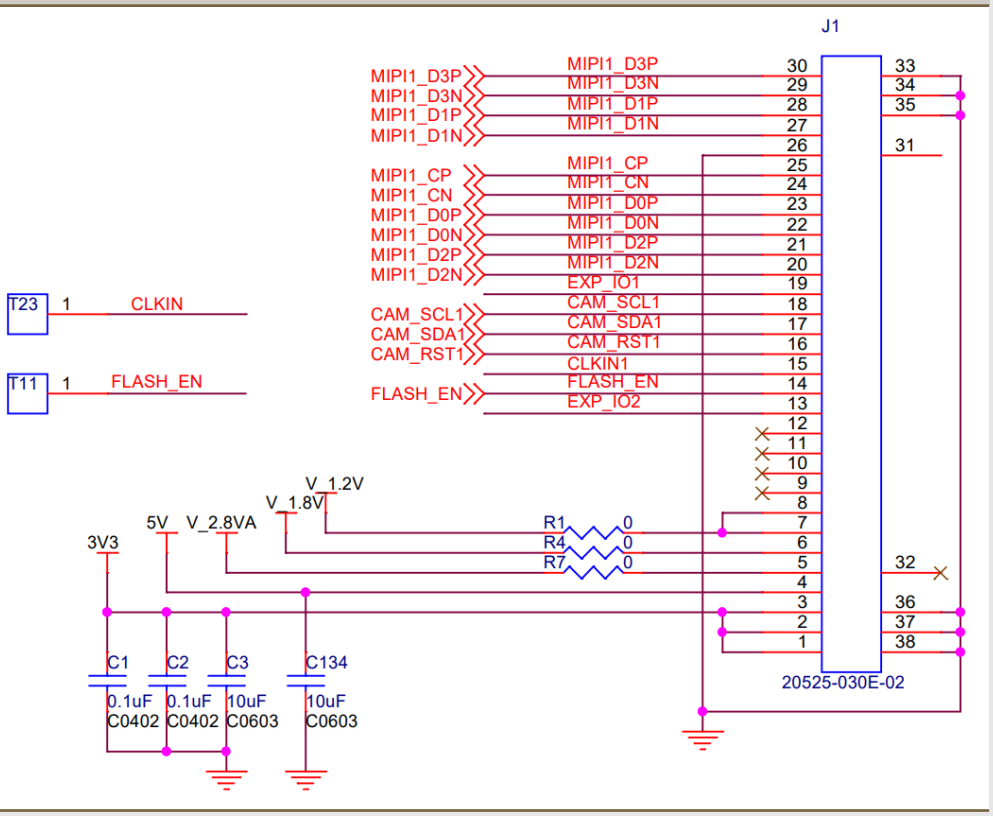

LI-JXAV-MIPI-ADPT-4CAM

INTERFACES

Interface J2 (Camera Channel 2)

- Part#: 20525-030E-02
- Number of Positions: 30
- Pitch: 0.4 mm
- Mating I-PEX Cable: FAW-1233-XX

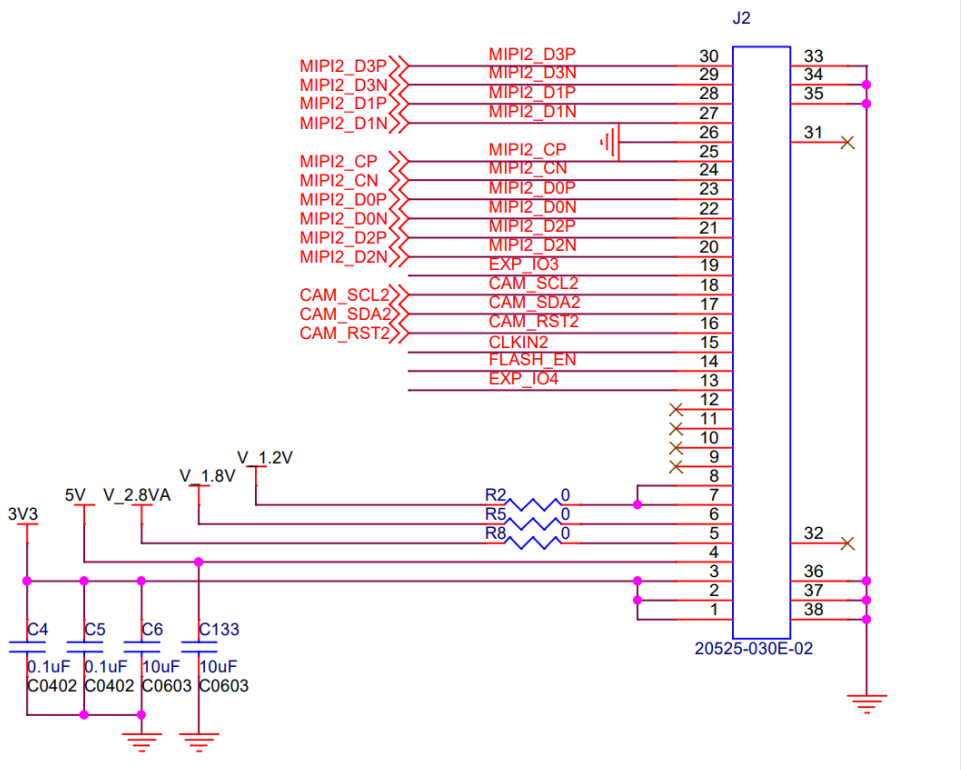

Interface J3 (Camera Channel 3)

- Part#: 20525-030E-02
- Number of Positions: 30
- Pitch: 0.4 mm
- Mating I-PEX Cable: FAW-1233-XX

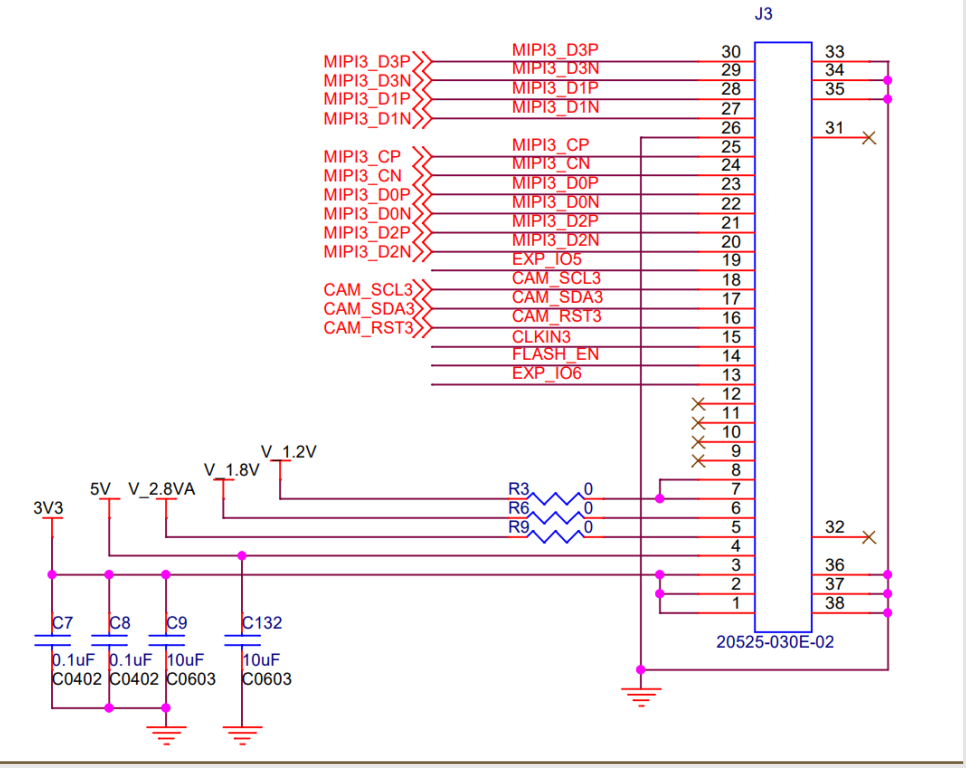

LI-JXAV-MIPI-ADPT-4CAM

INTERFACES

Interface J4 (Camera Channel 4)

- Part#: 20525-030E-02
- Number of Positions: 30
- Pitch: 0.4 mm
- Mating I-PEX Cable: FAW-1233-XX

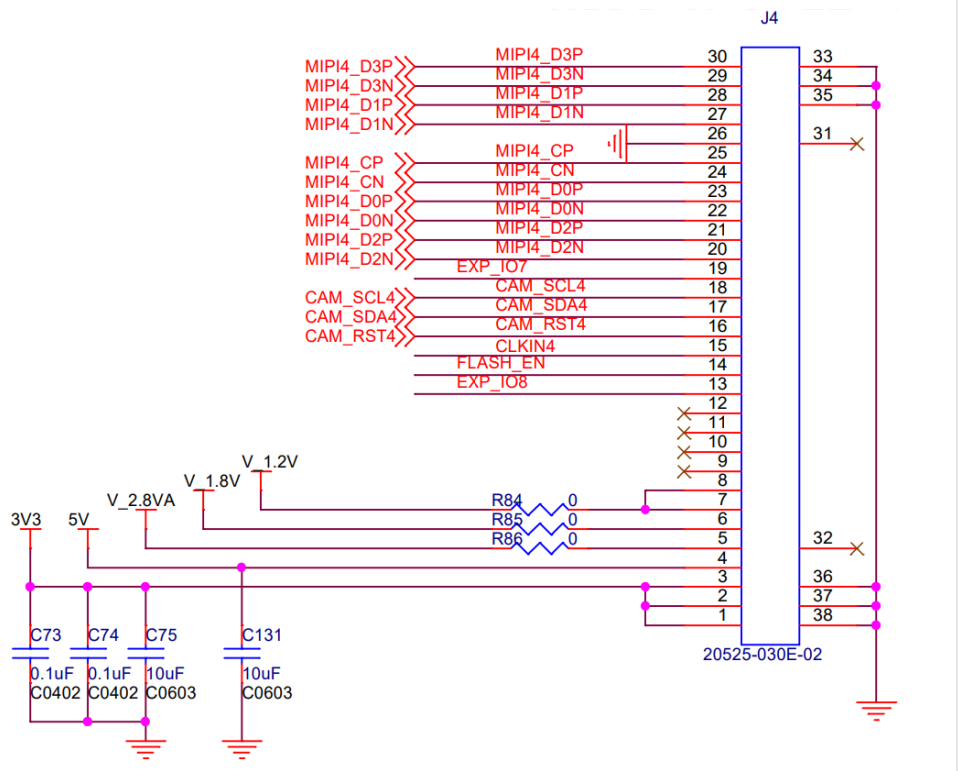

Interface J12 (NOT Used)

- Part#: 0894000220
- Number of Positions: 2
- Pitch: 2 mm

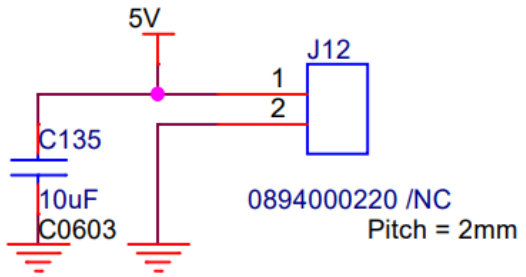

LI-JXAV-MIPI-ADPT-4CAM

INTERFACE J10 (To Xavier)

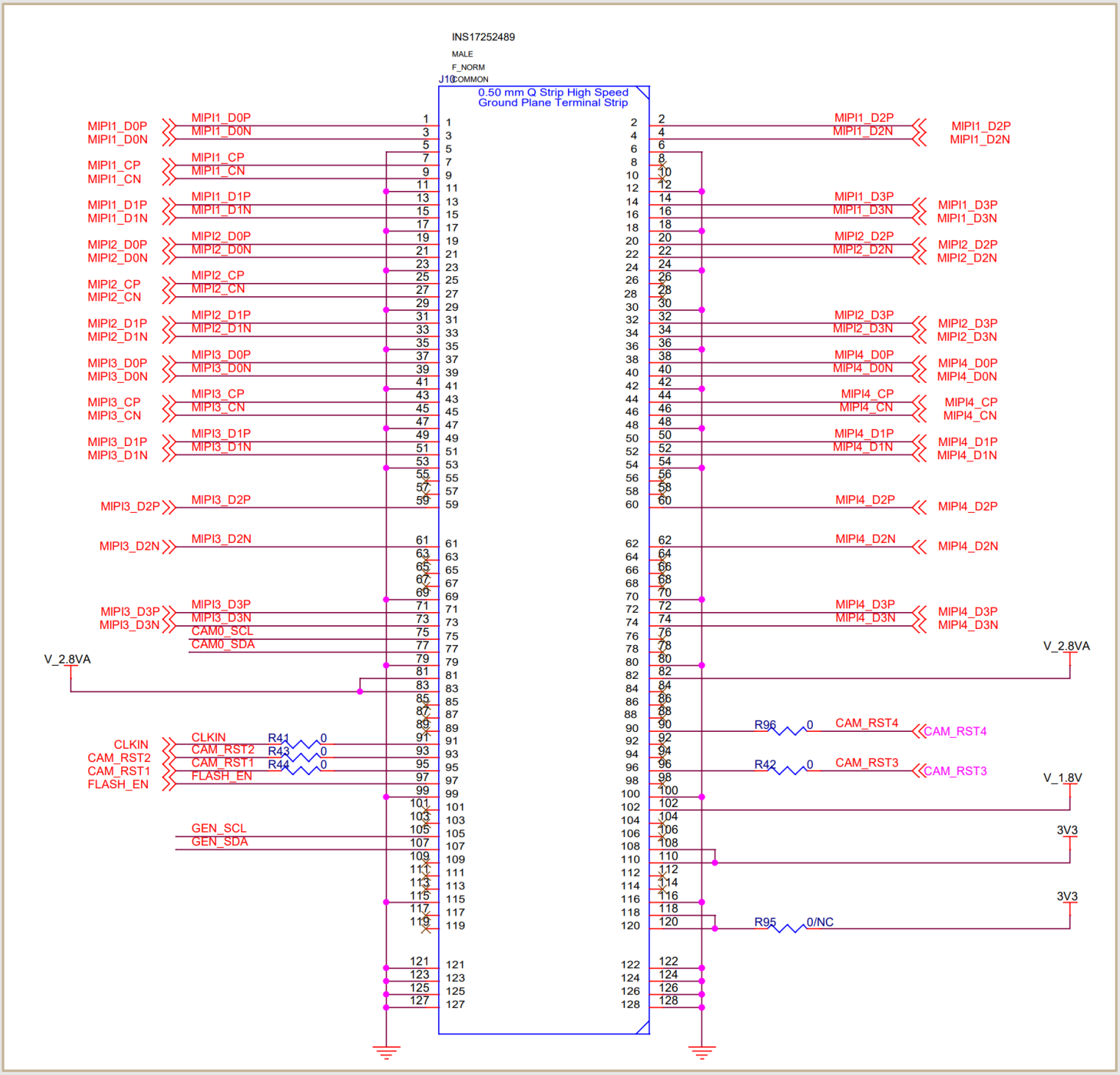

- Part#: QTH-060-01-L-D-A
- Number of Positions: 120
- Number of Rows: 2
- Pitch: 0.5 mm

LI-JXAV-MIPI-ADPT-4CAM

DIMENSIONS

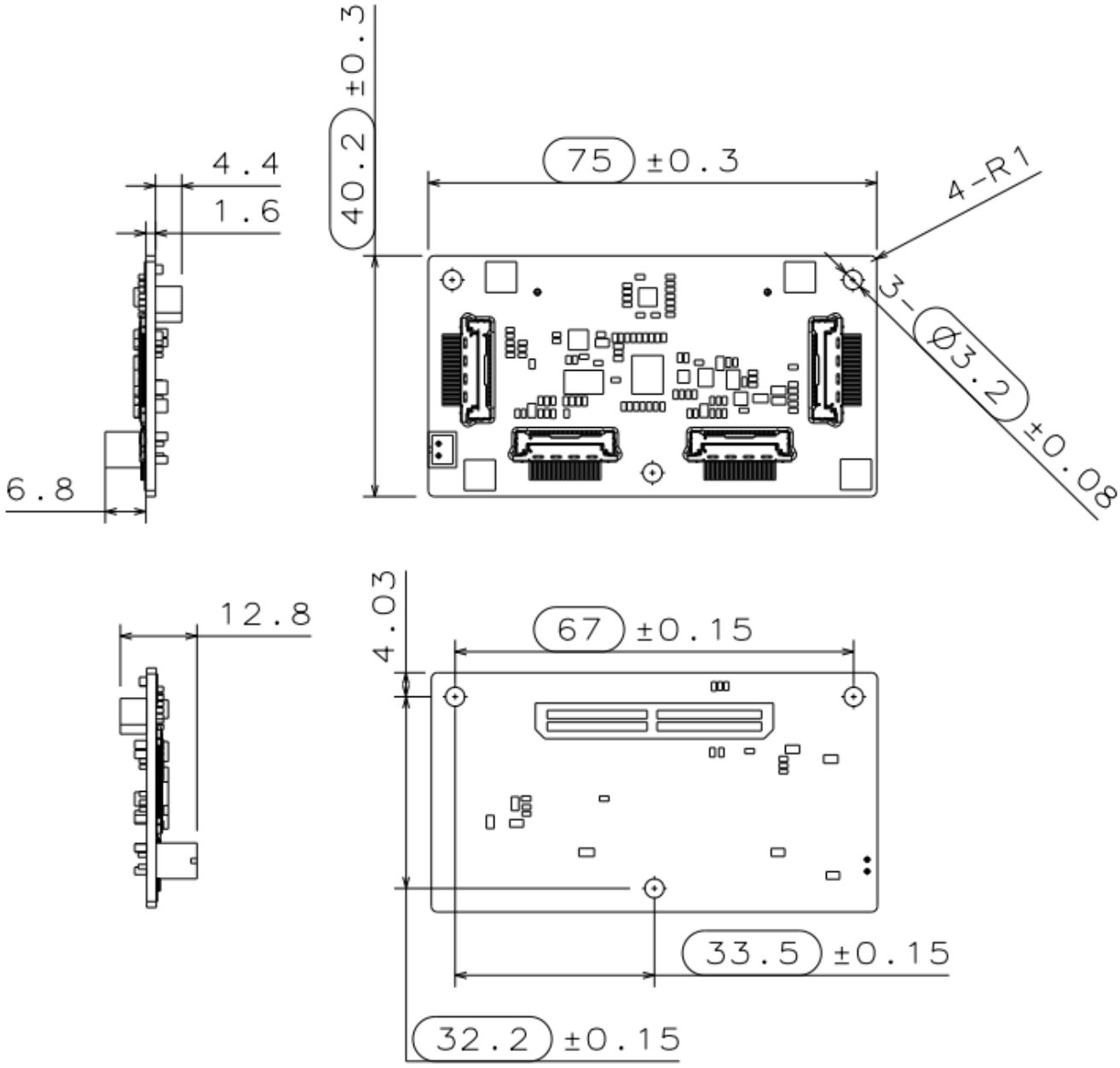

NOTE:

- ⬭ marked are important sizes.
- Tolerances for the unmarked are ± 0.3 mm.

Unit: mm

LI-JXAV-MIPI-ADPT-6CAM-FP

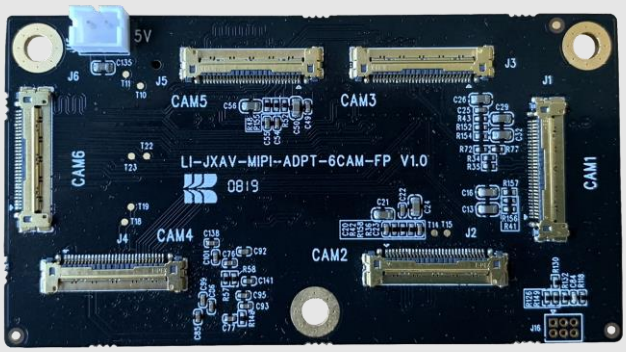

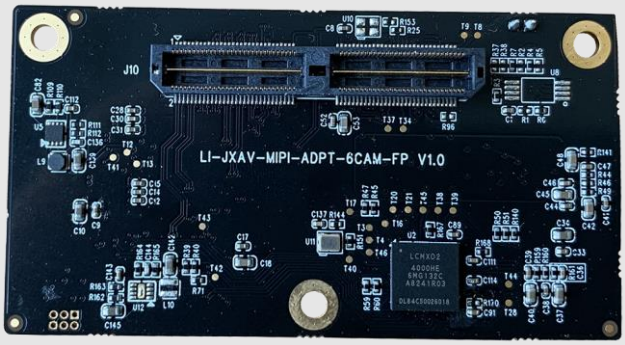

INTERFACES

Interface J1 (Camera Channel 1)

- Part#: 20525-030E-02
- Number of Positions: 30
- Pitch: 0.4 mm
- Mating I-PEX Cable: FAW-1233-XX

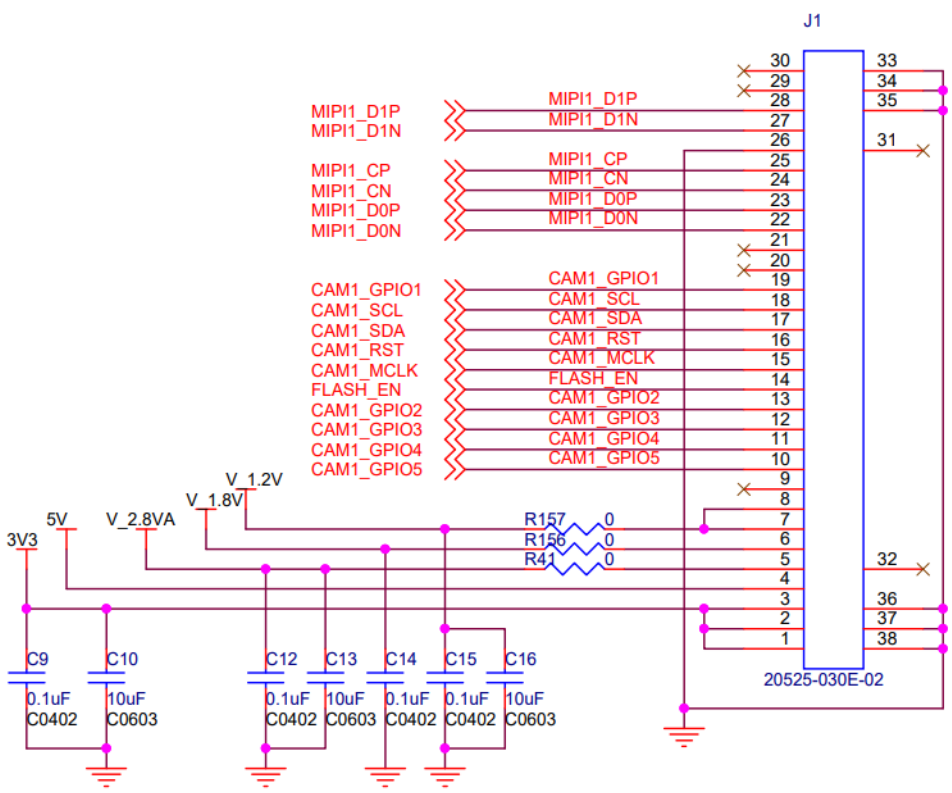

LI-JXAV-MIPI-ADPT-6CAM-FP

INTERFACES

Interface J2 (Camera Channel 2)

- Part#: 20525-030E-02
- Number of Positions: 30
- Pitch: 0.4 mm
- Mating I-PEX Cable: FAW-1233-XX

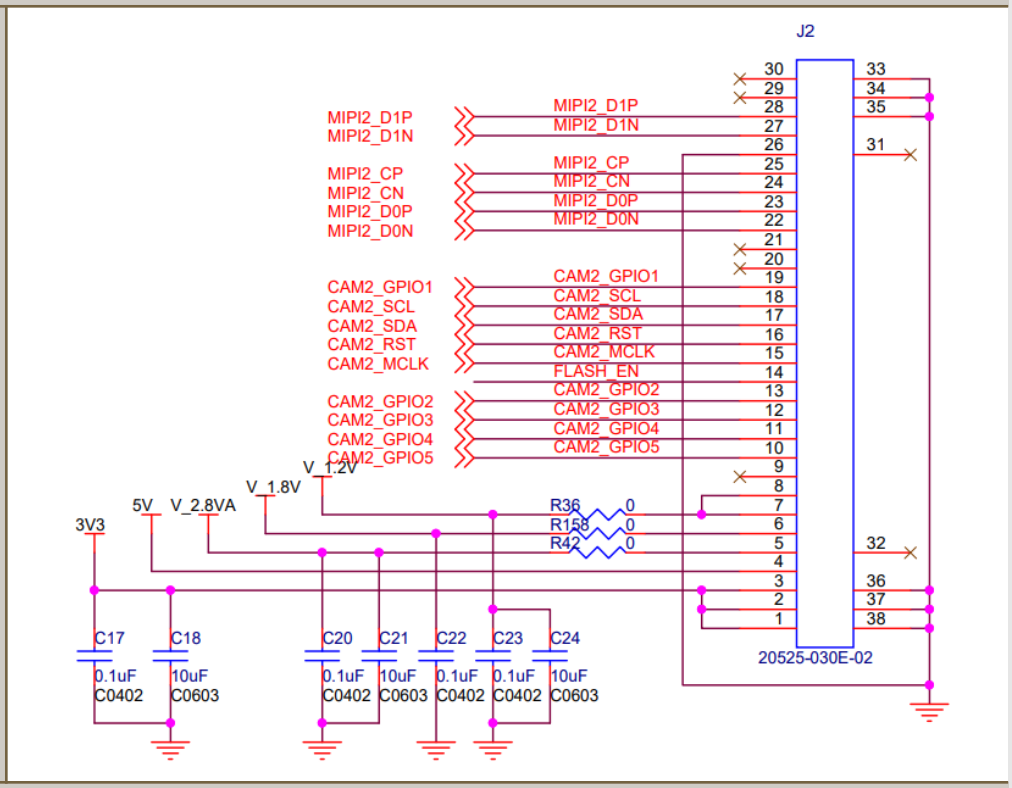

Interface J3 (Camera Channel 3)

- Part#: 20525-030E-02
- Number of Positions: 30
- Pitch: 0.4 mm
- Mating I-PEX Cable: FAW-1233-XX

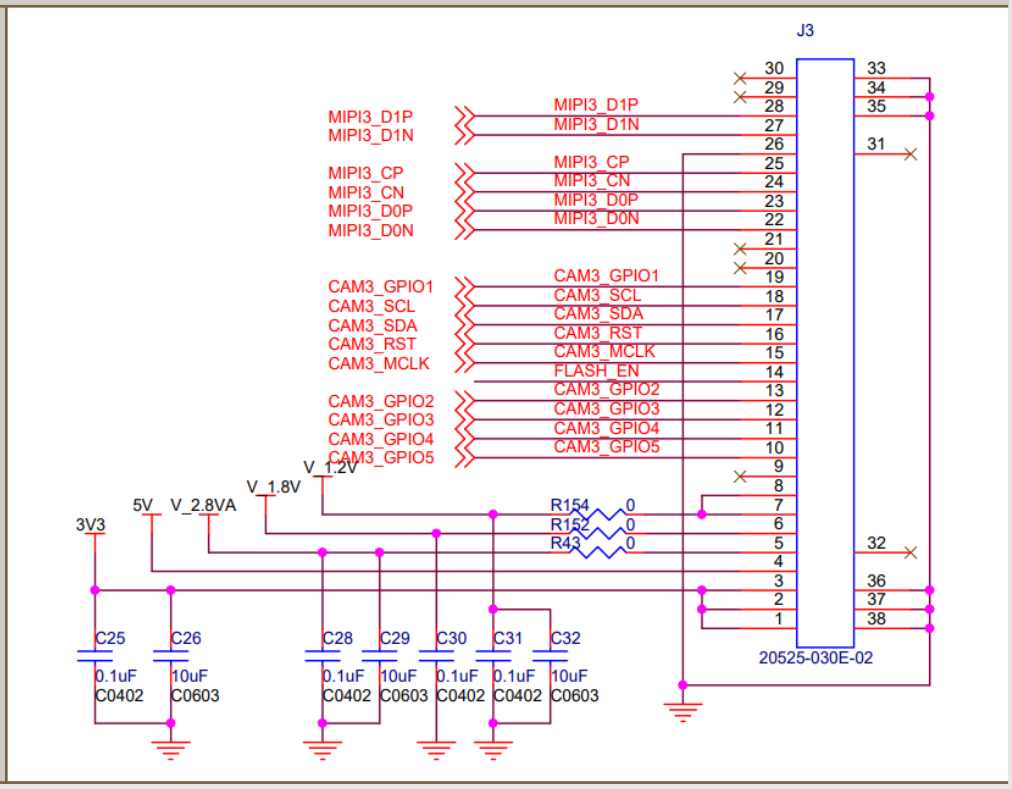

LI-JXAV-MIPI-ADPT-6CAM-FP

INTERFACES

Interface J4 (Camera Channel 4)

- Part#: 20525-030E-02
- Number of Positions: 30
- Pitch: 0.4 mm
- Mating I-PEX Cable: FAW-1233-XX

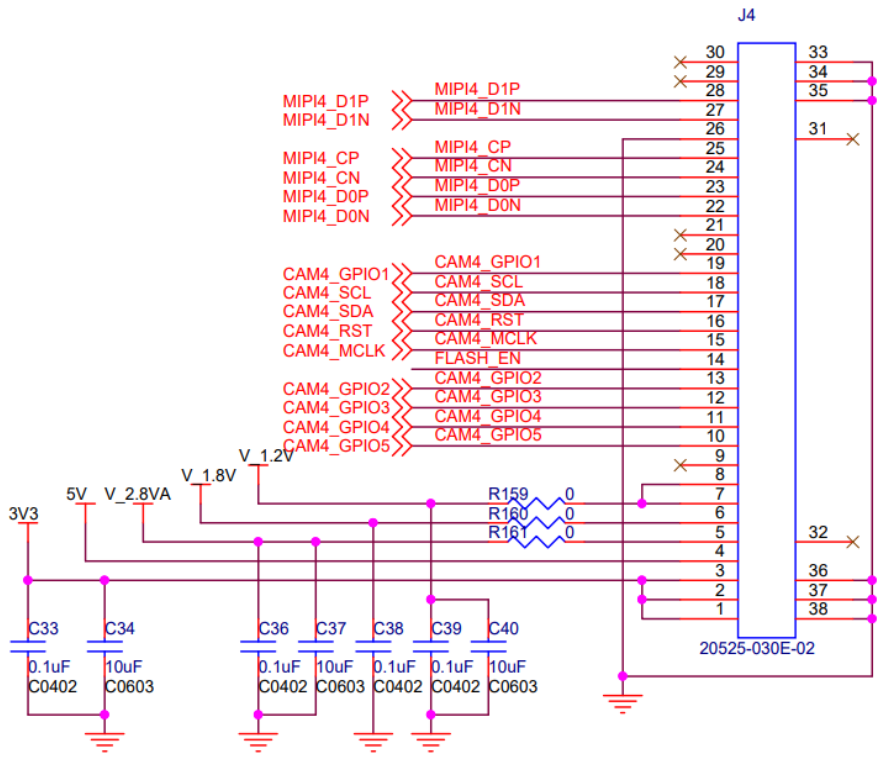

Interface J5 (Camera Channel 5)

- Part#: 20525-030E-02
- Number of Positions: 30
- Pitch: 0.4 mm
- Mating I-PEX Cable: FAW-1233-XX

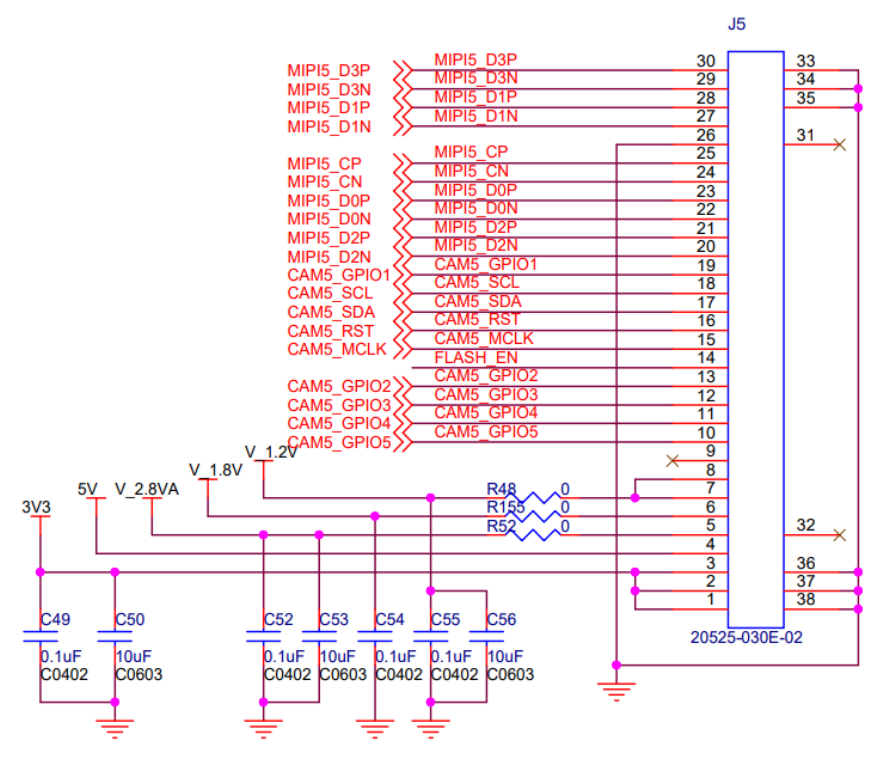

LI-JXAV-MIPI-ADPT-6CAM-FP

INTERFACES

Interface J6 (Camera Channel 6)

- Part#: 20525-030E-02
- Number of Positions: 30
- Pitch: 0.4 mm
- Mating I-PEX Cable: FAW-1233-XX

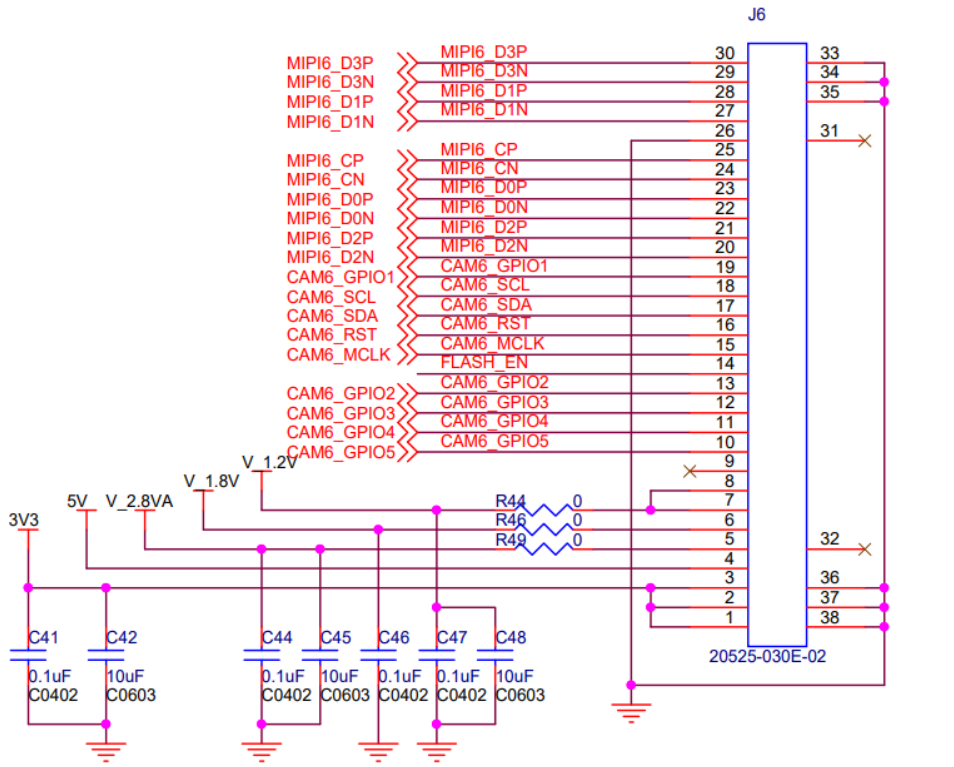

Interface J16 (FPGA Programming Interface)

- Part#: 20021311-00006T4LF
- Number of Positions: 6
- Pitch: 1.27mm
- Number of Rows: 2

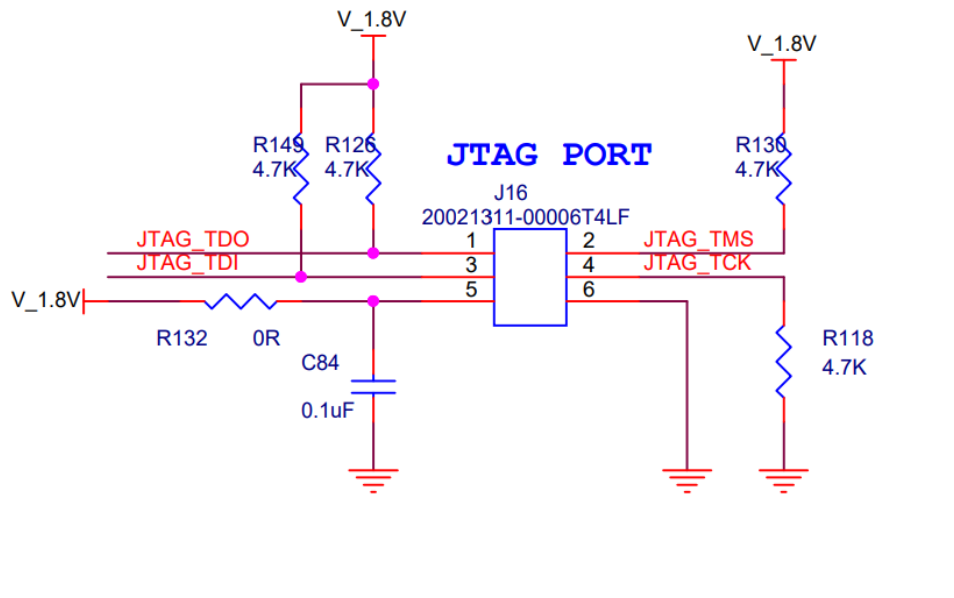

LI-JXAV-MIPI-ADPT-6CAM-FP

INTERFACES

Interface J15 (External Power Input Interface)

- Part#: 0894000220
- Number of Positions: 2
- Pitch: 2 mm

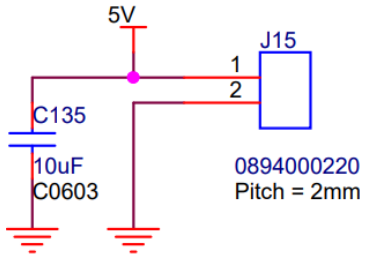

Interface J10 (To Xavier)

- Part#: QTH-060-01-L-D-A
- Number of Positions: 120
- Number of Rows: 2
- Pitch: 0.5 mm

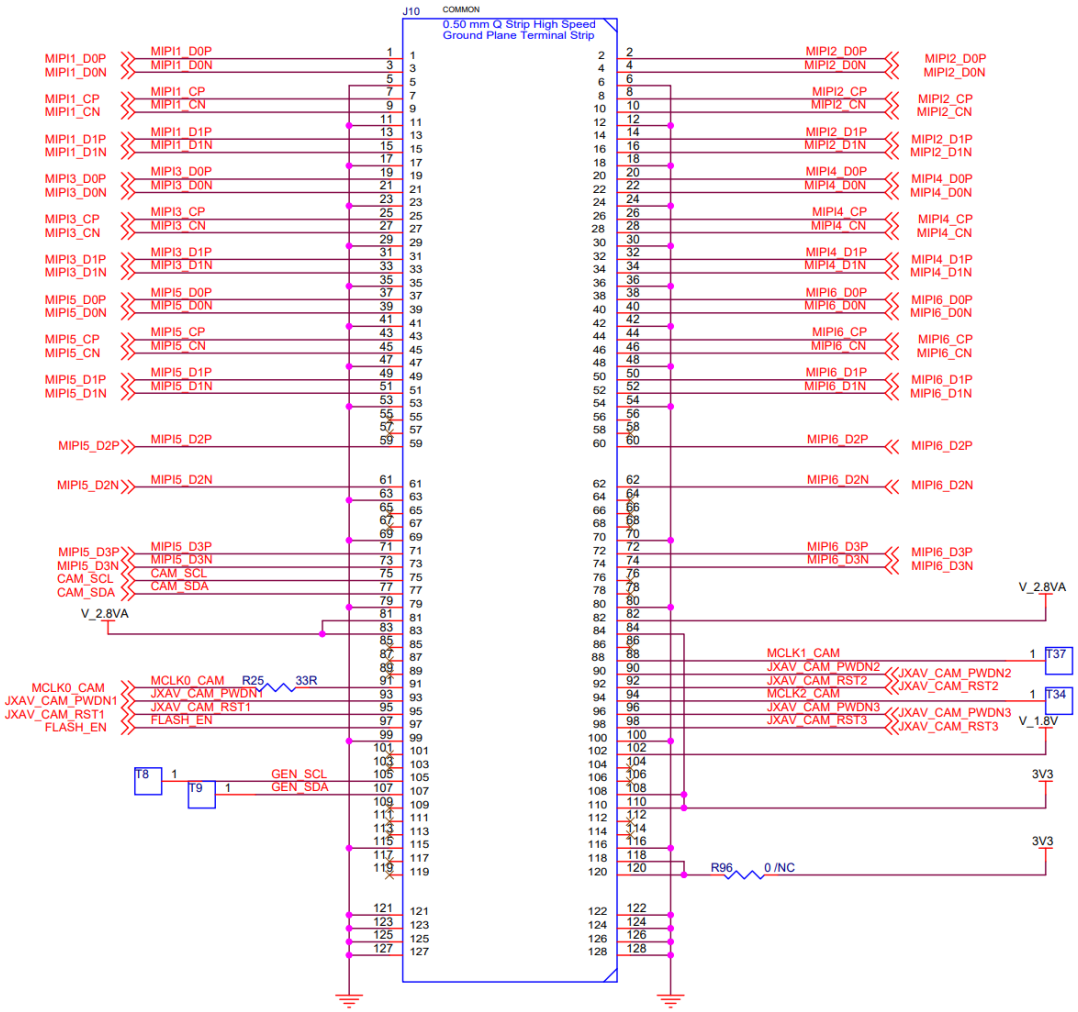

LI-JXAV-MIPI-ADPT-6CAM-FP

DIMENSIONS

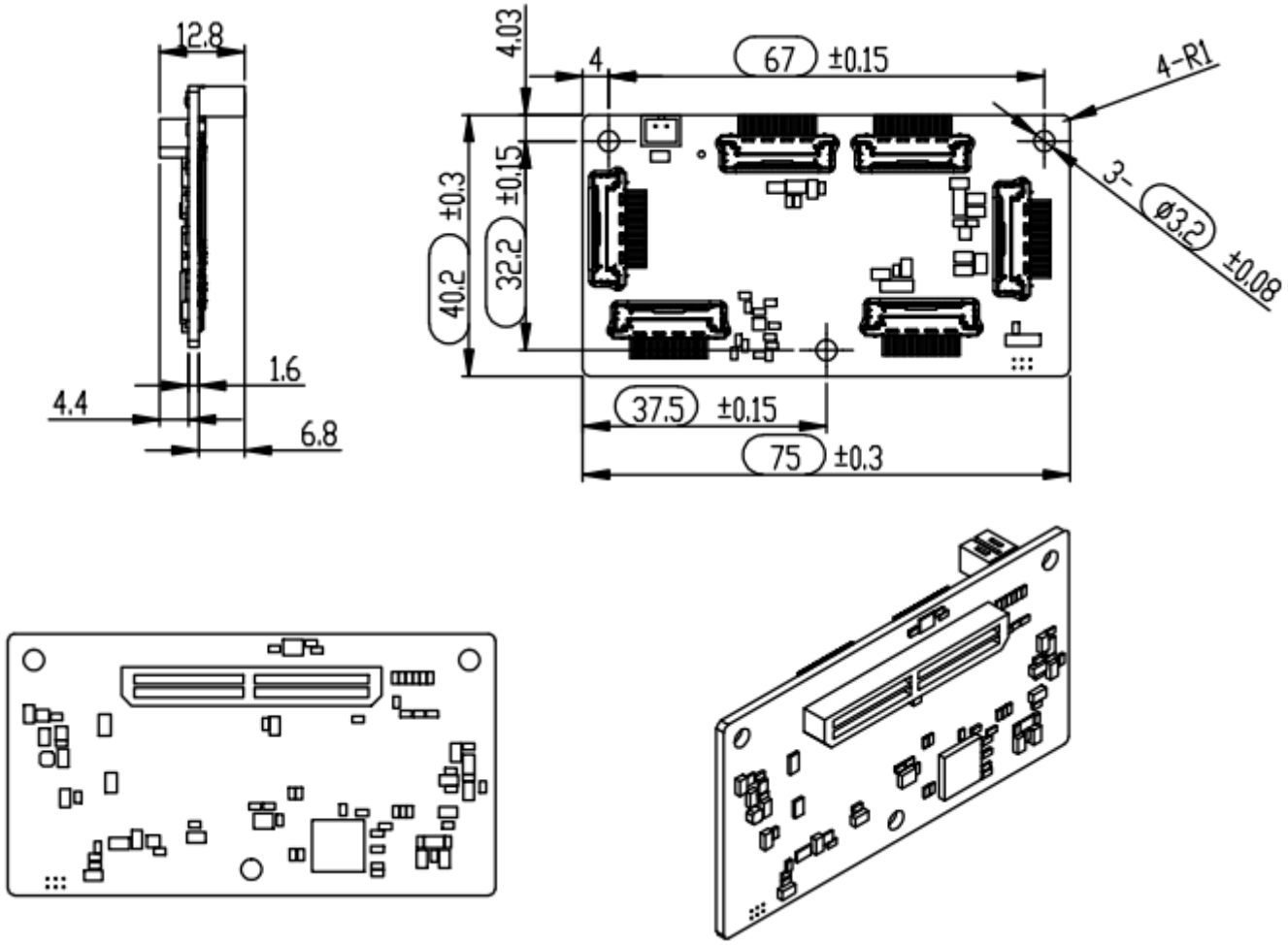

NOTE:

- ▭ marked are important sizes.
- Tolerances for the unmarked are ± 0.3 mm.

Unit: mm

FAW-1233-03 Cable

MECHANICAL DIAGRAM

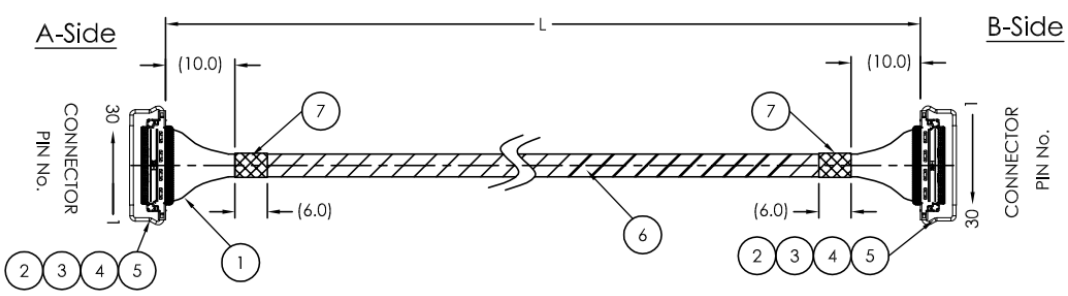

Fig. 1 Applying UV resin

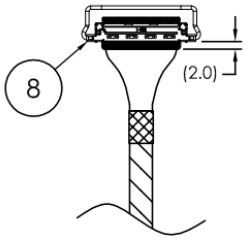

WIRING

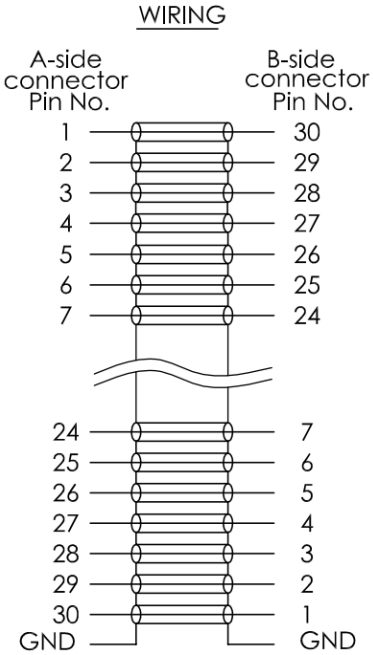

NOTE:

- Total length: 300.0 ± 10.0.
- Apply UV resin at the end of connector to cover cables both sides of the cable assembly (Fig.1).

Unit: mm

LI-IMX577-MIPI-M12

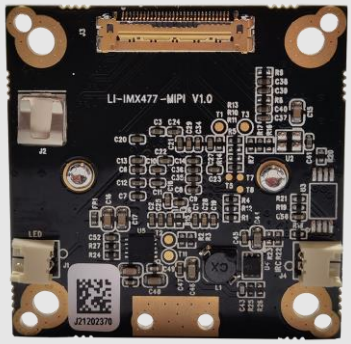

CAMERA SPECIFICATIONS

Sensor	Diagonal 7.857 mm (Type 1/2.3) 12.3MP CMOS Image Sensor IMX577
Optical Format	1/2.3"
Resolution	4056 (H) x 3040 (V) (active pixels)
Pixel Size	1.55 x 1.55 µm
Output Format	8-bit / 10-bit / 12-bit RAW data
Maximum Frame Rate	60 fps @ 4056 x 3040
ISP	Not included
Color / Mono	Color sensor
Interface	4-lane MIPI CSI-2
Power Consumption	122 mA @ 3.3 VDC
Weight	~ 16 g
Part#	LI-IMX577-MIPI-M12

LI-IMX577-MIPI-M12

INTERFACES

Interface J3

- Connector Part#: 20525-030E-02
- Number of Positions: 30
- Pitch: 0.4 mm
- Mating I-PEX Cable: FAW-1233
- Sensor I2C Address: 0x10 (7-bit)
- Sensor input clock needs to be supplied from pin 16.
- External Power Supply: 3.3V, 5.0V
- 2.8V, 1.8V, 1.05V are generated from board.
- 5.0V is not used since it's for IR cut switch function only.

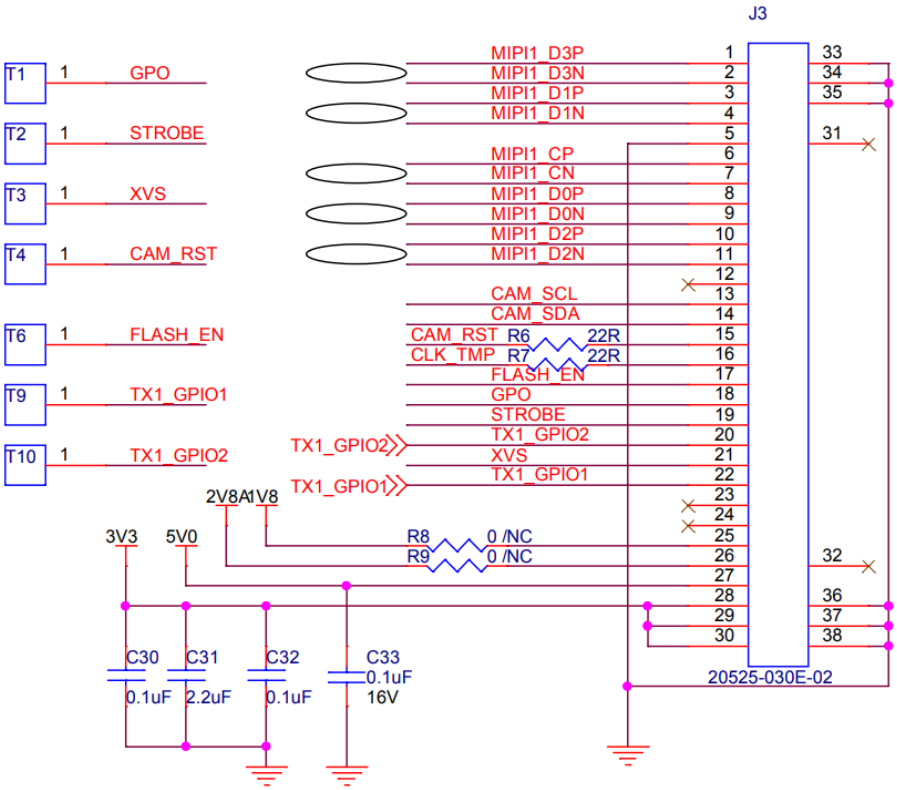

Interface J4

- Connector Part#: 1734829-2
- Number of Positions: 2
- Pitch: 1.25 mm

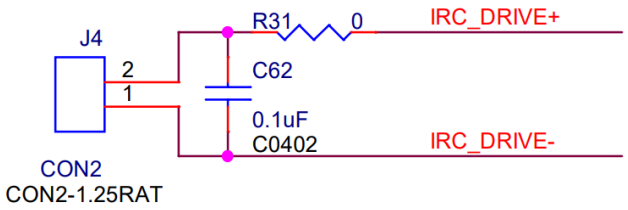

Interface J1

- Connector Part#: 1734829-2
- Number of Positions: 2
- Pitch: 1.25 mm

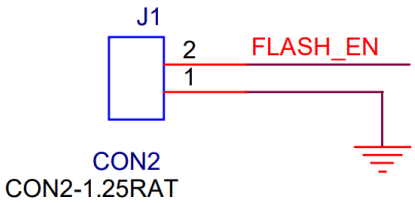

LI-IMX577-MIPI-M12

DIMENSIONS

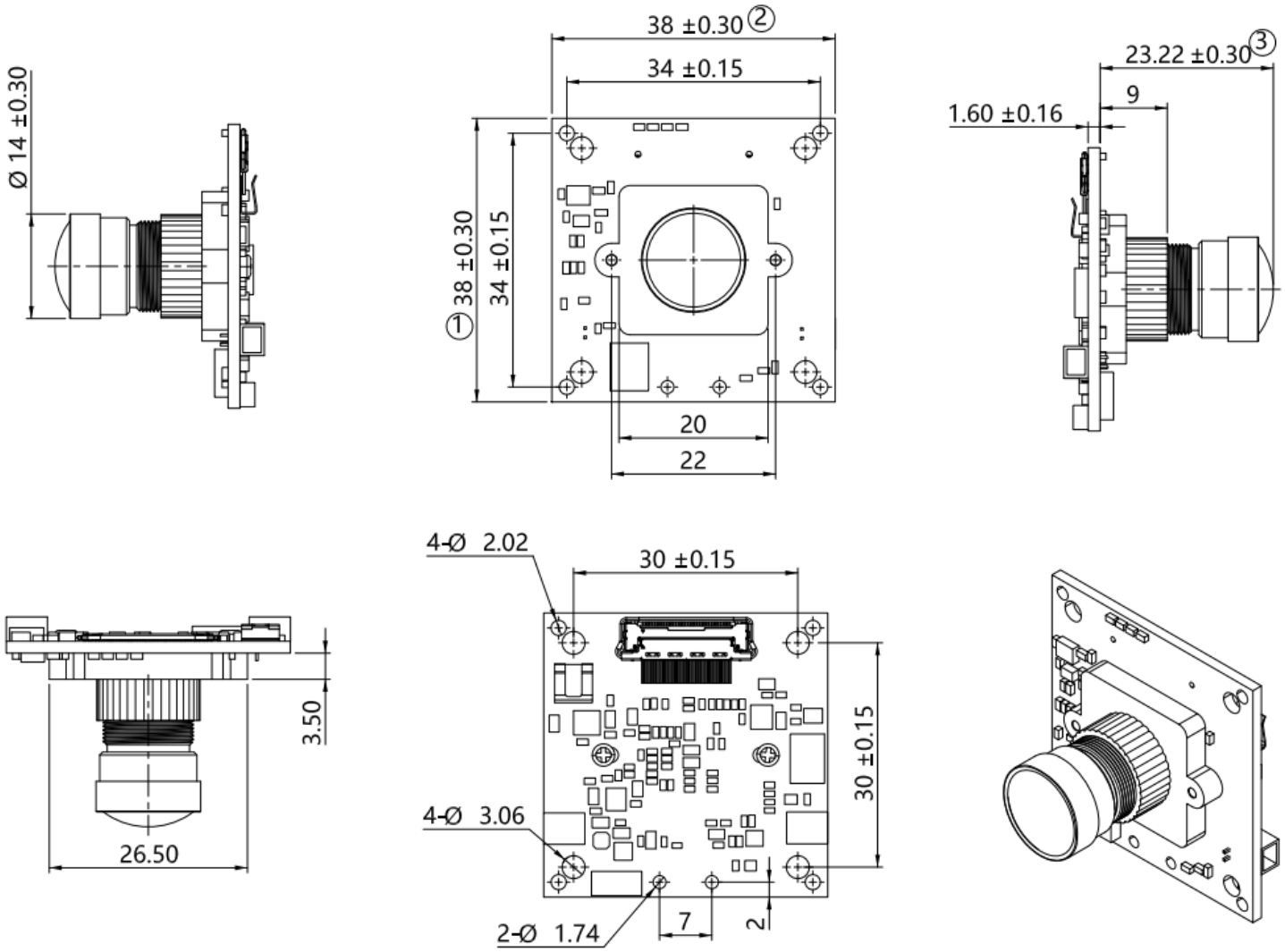

NOTE:

- ⊗ marked are important sizes.
- Tolerances for the unmarked are ± 0.3 mm.

Unit: mm

REVISION HISTORY

Revision	Description	Release Date
1.0	First release.	23 Mar 2019
1.1	Added LI-JXAV-MIPI-ADPT-6CAM-FP board.	25 Jun 2019
1.2	Added LI-XAVIER-KIT-IMX577M12-6CAM-Q.	21 May 2019
1.3	Replaced lens SYD1201A with lens JSD2733-A1 and updated LI-IMX577-MIPI-M12 2D dimensions.	16 Dec 2021
1.4	Deleted quoted info from sensor spec.	26 May 2022
1.5	Updated 2D dimensions of LI-IMX577-MIPI-M12.	28 Jul 2022

910 Auburn Ct, Fremont, CA 94538, USA
Phone: +1-408-263-0988
Fax: +1-408-217-1960
Email: sales@leopardimaging.com
Website: www.leopardimaging.com