LI-NANO-CB-IMX290M12-X Data Sheet

Key Features

- Compatible with Nvidia® Jetson NANO™
- MIPI CSI-2 interface
- Supports up to four cameras (2-lane mode)
- Sony Diagonal 6.46 mm (Type 1/2.8) 2MP CMOS Image Sensor IMX290
- Active pixels: 1945 (H) x 1109 (V)
- Pixel size: 2.9 x 2.9 µm
- Color camera
- Supports 1948 x 1096 @ 60 fps
- Supports PoE (options)
- I-PEX cable part#: FAW-1233-03
- Length of the I-PEX cable: 300mm
- Supports multiple length cables
- MIPI connector part#: 20525-030E-02
- Supports M12 lens
- Provides driver binary and source code
- Allows customization
- Part#:

LI-NANO-CB-IMX290M12-X
LI-NANO-CB-POE-IMX290M12-X

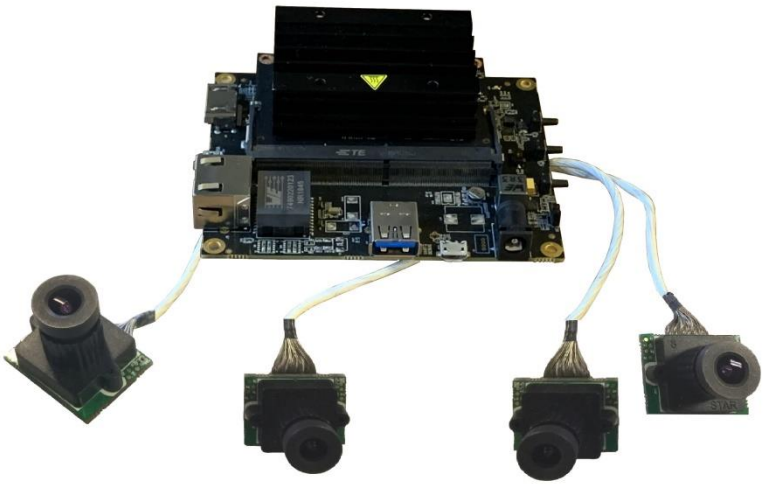

Lens Spec

- Focal Length: 3.98 mm +/- 5%
- Aperture, F/#: 2.3 +/- 5%
- Built in 650 nm IR cut filter
- FOV (D / H / V): 96° / 82.4° / 50°
- TV Distortion: < 12%

BOM

#	Items	QTY
1	LI-NANO-CB V1.2 or LI-NANO-CB-POE V1.2	1
2	Nvidia Jetson Nano SOM	1
3	LI-IMX290-MIPI	1,2,3 or 4
4	FAW-1233-03 cable	1,2,3 or 4
5	DC 12V power supply	1
6	USB 2.0 Type A - Micro B cable	1

Leopard Imaging Inc.

910 Auburn Ct, Fremont, CA 94538, USA
Phone: +1-408-263-0988
Fax: +1-408-217-1960
Email: sales@leopardimaging.com
Website: www.leopardimaging.com

Order Information

LI-NANO-CB-IMX290M12 / LI-NANO-CB-POE-IMX290M12

BOM

#	Items	QTY
1	LI-NANO-CB or LI-NANO-CB-POE	1
2	Nvidia Jetson Nano SOM	1
3	LI-IMX290-MIPI	1
4	FAW-1233-03 cable	1
5	DC 12V power supply	1
6	USB 2.0 Micro B cable	1

LI-NANO-CB-IMX290M12-D / LI-NANO-CB-POE-IMX290M12-D

BOM

#	Items	QTY
1	LI-NANO-CB or LI-NANO-CB-POE	1
2	Nvidia Jetson Nano SOM	1
3	LI-IMX290-MIPI	2
4	FAW-1233-03 cable	2
5	DC 12V power supply	1
6	USB 2.0 Micro B cable	1

Leopard Imaging Inc.

910 Auburn Ct, Fremont, CA 94538, USA
Phone: +1-408-263-0988
Fax: +1-408-217-1960
Email: sales@leopardimaging.com
Website: www.leopardimaging.com

LI-NANO-CB-IMX290M12-T / LI-NANO-CB-POE-IMX290M12-T

BOM

#	Items	QTY
1	LI-NANO-CB or LI-NANO-CB-POE	1
2	Nvidia Jetson Nano SOM	1
3	LI-IMX290-MIPI	3
4	FAW-1233-03 cable	3
5	DC 12V power supply	1
6	USB 2.0 Micro B cable	1

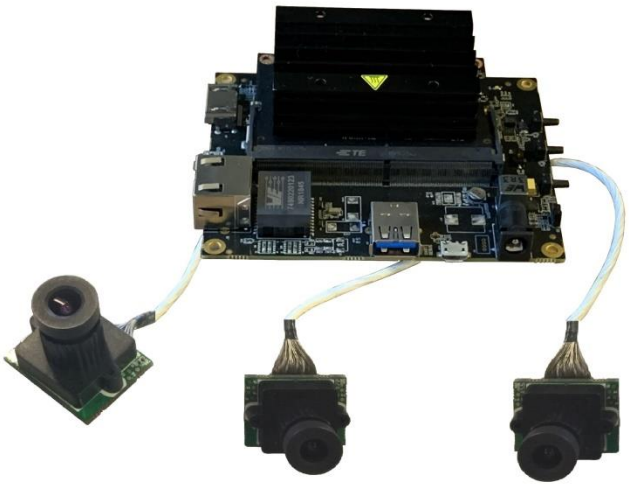

LI-NANO-CB-IMX290M12-Q / LI-NANO-CB-POE-IMX290M12-Q

BOM

#	Items	QTY
1	LI-NANO-CB or LI-NANO-CB-POE	1
2	Nvidia Jetson Nano SOM	1
3	LI-IMX290-MIPI	4
4	FAW-1233-03 cable	4
5	DC 12V power supply	1
6	USB 2.0 Micro B cable	1

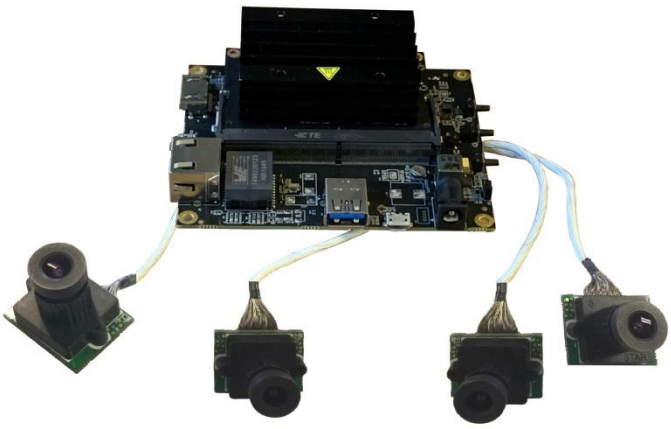

Leopard Imaging Inc.

910 Auburn Ct, Fremont, CA 94538, USA
Phone: +1-408-263-0988
Fax: +1-408-217-1960
Email: sales@leopardimaging.com
Website: www.leopardimaging.com

Register Information

Device (on LI-NANO-CB)	I2C Address (7-bit)
tca9548 (I2C switcher)	0x70
J13 (CAM1)	0x00
J3 (CAM2)	0x01
J25 (CAM3)	0x02
J26 (CAM4)	0x03

Device (on LI-IMX290-MIPI)	I2C Address (7-bit)
IMX290 sensor	0x1a

Power Consumption

Opened Cameras	Power Consumption
No camera	Around 200mA @ 12V
1 camera (1948x1096@60fps)	TBD
2 cameras (1948x1096@60fps)	TBD
3 cameras (1948x1096@60fps)	TBD
4 cameras (1948x1096@60fps)	TBD

Auto Boot

SW4	Boot Mode
ON	Manual boot
OFF	Auto boot

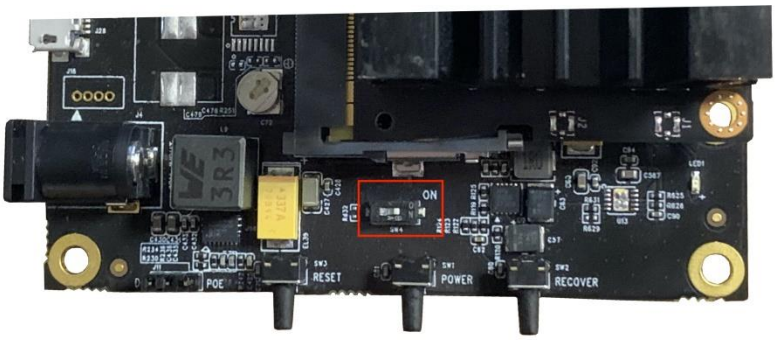

Leopard Imaging Inc.

910 Auburn Ct, Fremont, CA 94538, USA
Phone: +1-408-263-0988
Fax: +1-408-217-1960
Email: sales@leopardimaging.com
Website: www.leopardimaging.com

Dimensions

LI-IMX290-MIPI

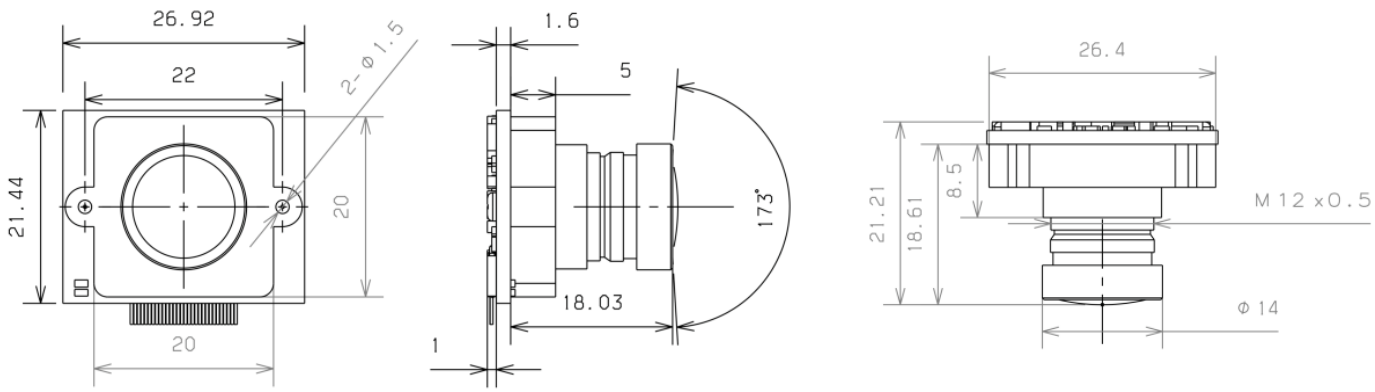

LI-NANO-CB / LI-NANO-CB-POE

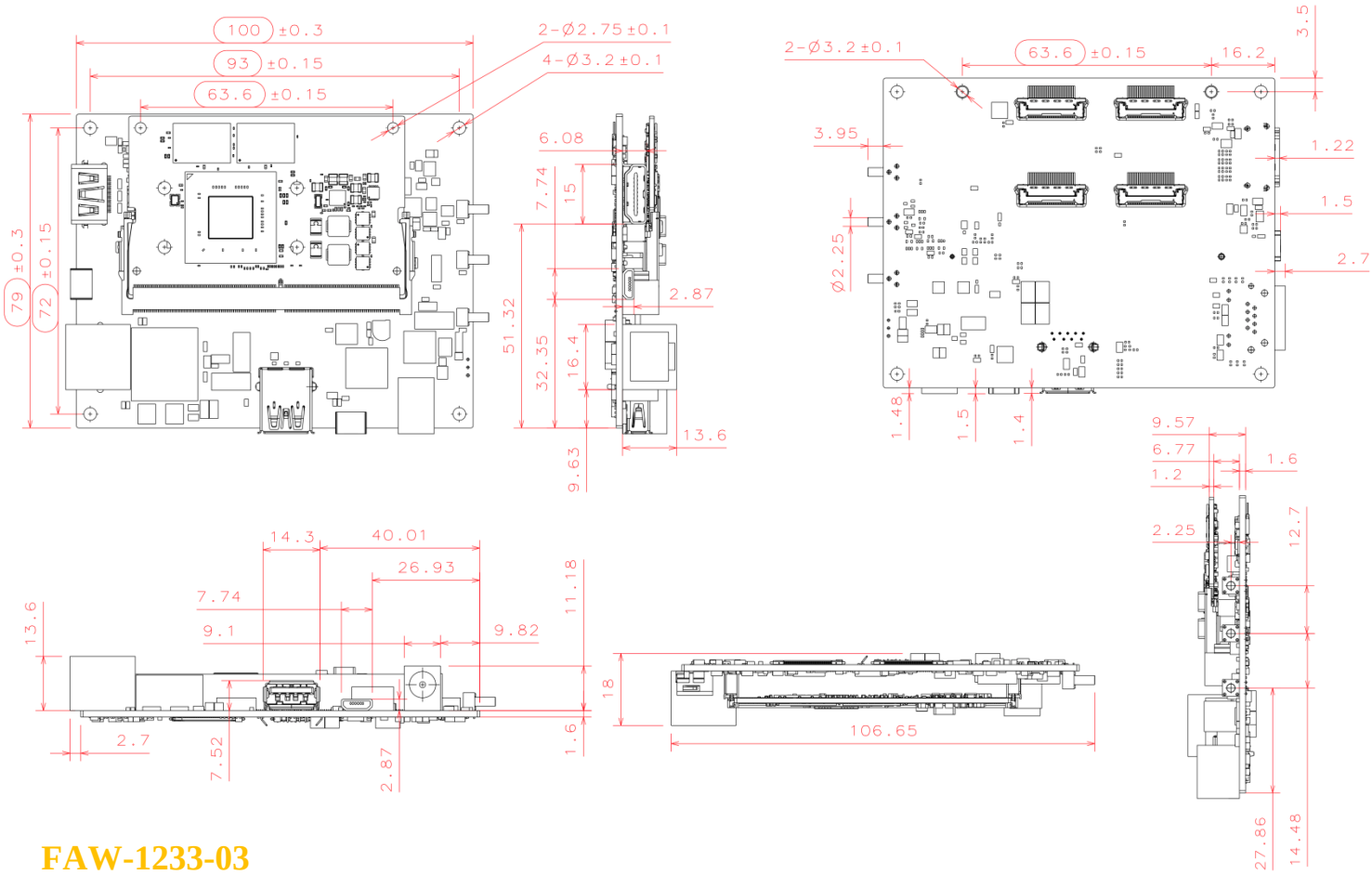

FAW-1233-03

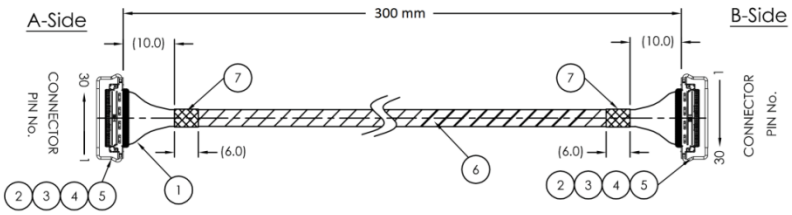

Leopard Imaging Inc.

910 Auburn Ct, Fremont, CA 94538, USA
Phone: +1-408-263-0988
Fax: +1-408-217-1960
Email:sales@leopardimaging.com
Website: www.leopardimaging.com

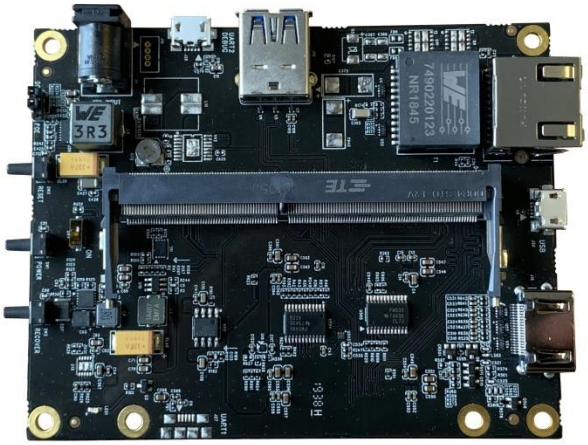

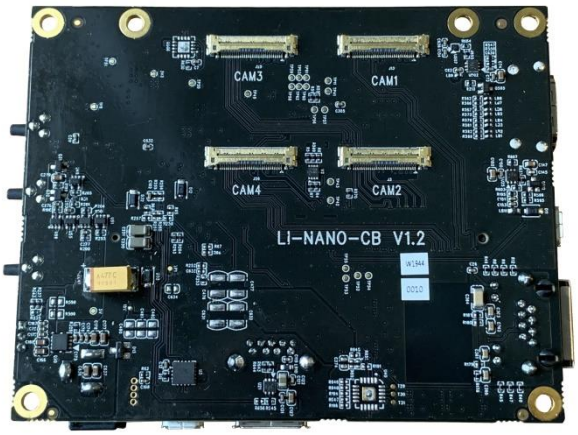

Camera Interfaces

Interface J13 (CAM1)	
▪ Part#: 20525-030E-02 ▪ Number of Positions: 30 ▪ Pitch: 0.4 mm ▪ Mating I-PEX cable: FAW-1233-xx	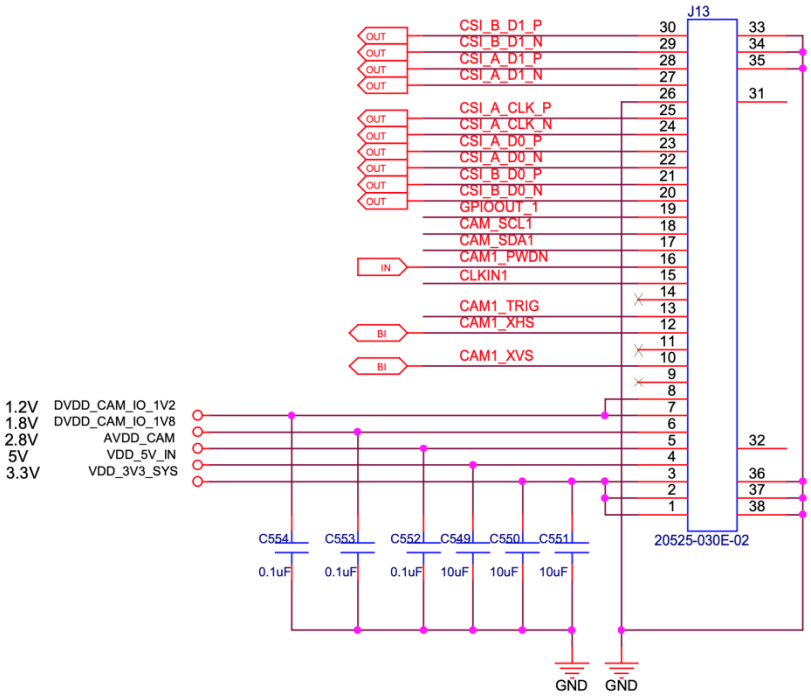

Leopard Imaging Inc.

910 Auburn Ct, Fremont, CA 94538, USA
Phone: +1-408-263-0988
Fax: +1-408-217-1960
Email:sales@leopardimaging.com
Website: www.leopardimaging.com

Interface J3 (CAM2)

- Part#: 20525-030E-02
- Number of Positions: 30
- Pitch: 0.4 mm
- Mating I-PEX cable: FAW-1233-xx

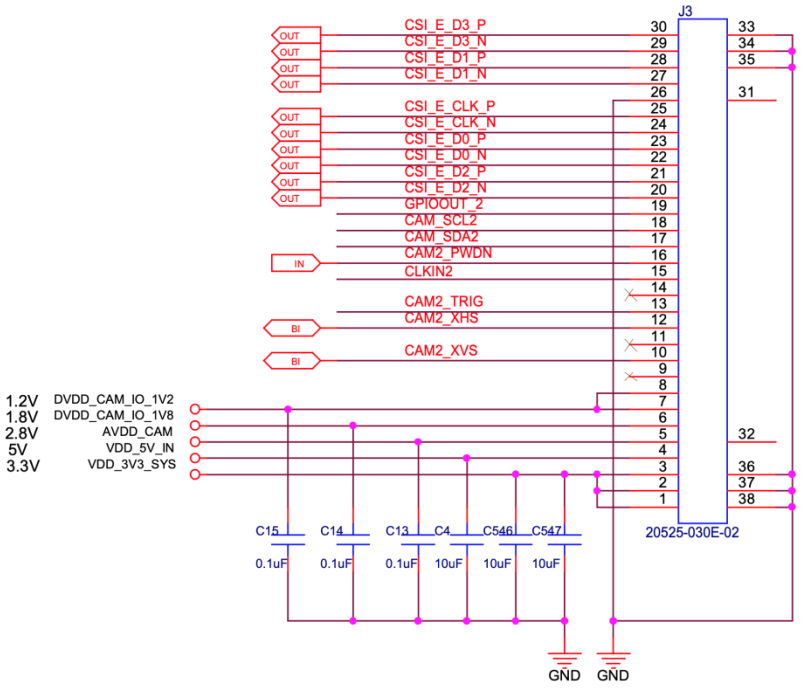

Interface J25 (CAM3)

- Part#: 20525-030E-02
- Number of Positions: 30
- Pitch: 0.4 mm
  Mating I-PEX cable: FAW-1233-xx

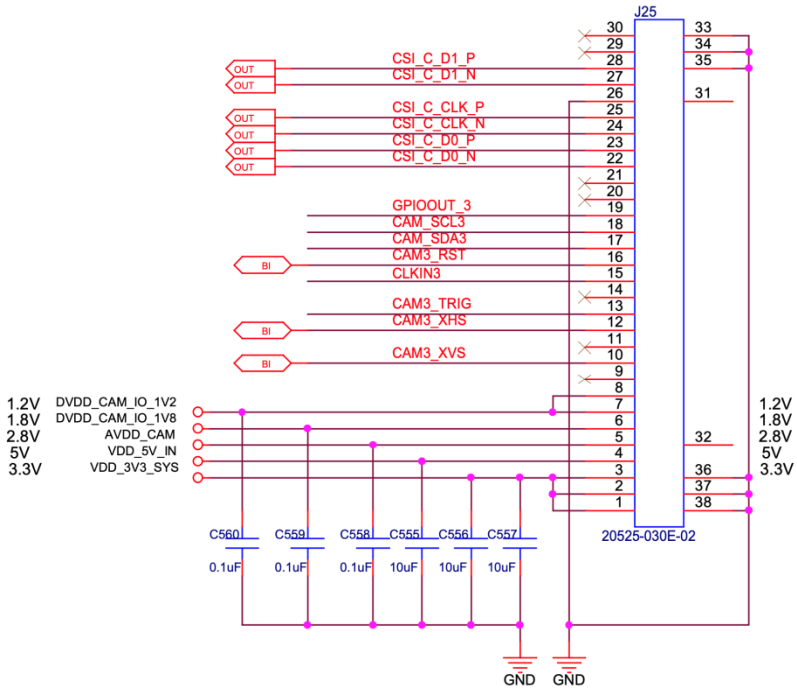

Leopard Imaging Inc.

910 Auburn Ct, Fremont, CA 94538, USA
Phone: +1-408-263-0988
Fax: +1-408-217-1960
Email:sales@leopardimaging.com
Website: www.leopardimaging.com

Interface J26 (CAM4)

- Part#: 20525-030E-02
- Number of Positions: 30
- Pitch: 0.4 mm
- Mating I-PEX cable: FAW-1233-xx

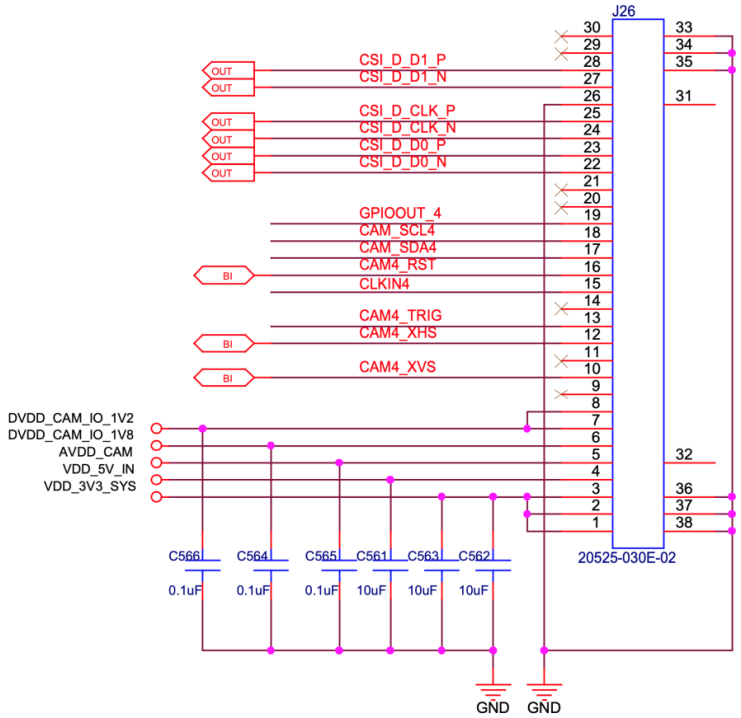

Interface J18 (I2C Header)

- Number of Positions: 4
- Pitch: 1.25 mm

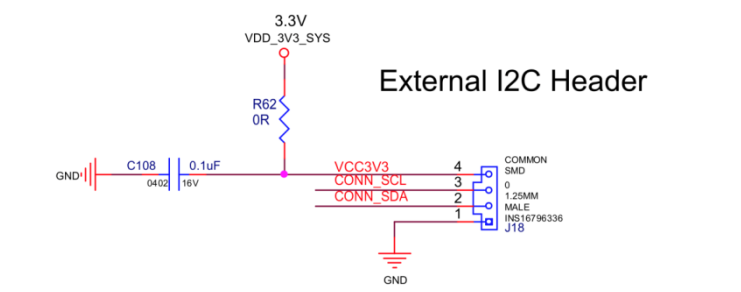

J27, J28 (UART)

- USB 2.0 micro-B interface

Note: R27 is not populated.

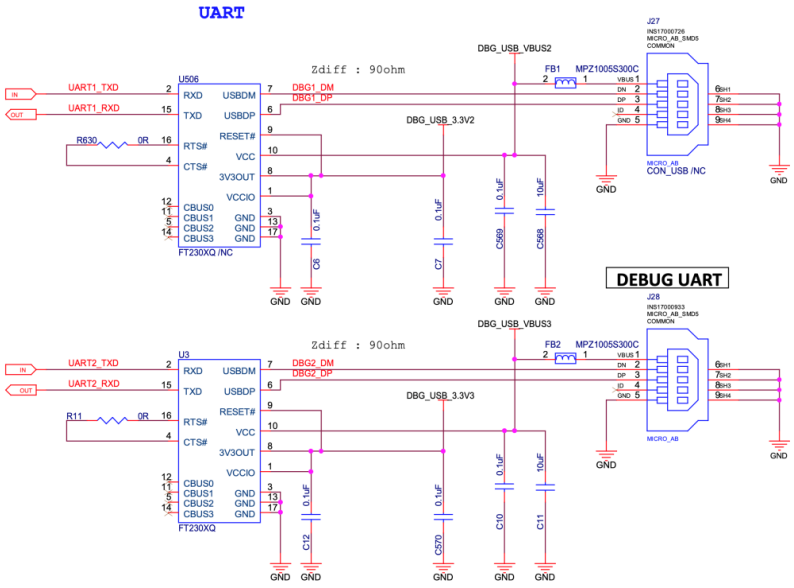

Leopard Imaging Inc.

910 Auburn Ct, Fremont, CA 94538, USA
Phone: +1-408-263-0988
Fax: +1-408-217-1960
Email:sales@leopardimaging.com
Website: www.leopardimaging.com

LI-IMX290-MIPI-M12

Camera Spec	
Image sensor	Sony Diagonal 6.46 mm (Type 1/2.8) CMOS Image Sensor IMX290
Optical format	1/2.8"
Number of active pixels	1945 (H) x 1109 (V)
Pixel size	2.9 x 2.9 µm
Color or Mono	Color
Interface	MIPI interface
Lens mount	M12
Weight	~ 14 g
Interfaces	
Interface J2: ▪ Part#: 20525-030E-02C ▪ Number of Positions: 30 ▪ Pitch: 0.4 mm ▪ Mating I-PEX cable: FAW-1233-03 (300 mm)	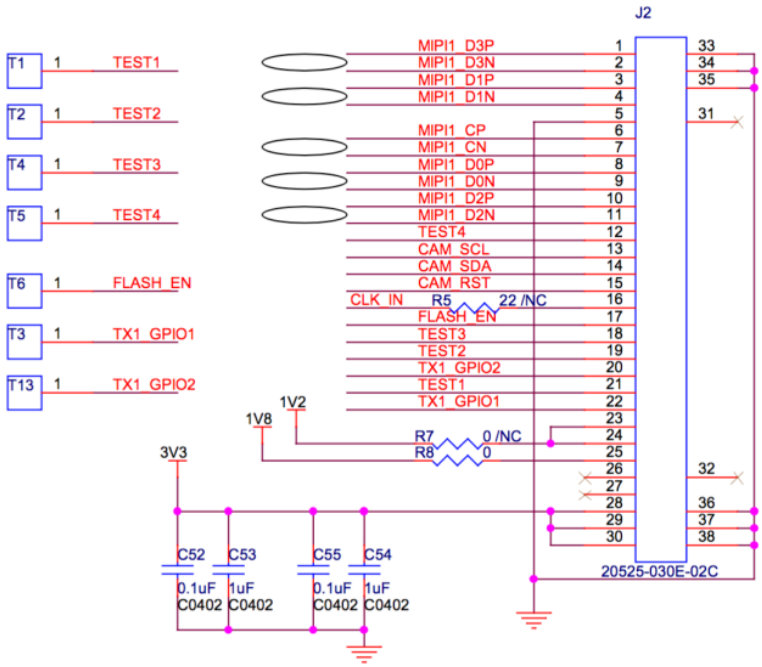

Leopard Imaging Inc.

910 Auburn Ct, Fremont, CA 94538, USA
Phone: +1-408-263-0988
Fax: +1-408-217-1960
Email: sales@leopardimaging.com
Website: www.leopardimaging.com

SA140 Lens Mount Spec

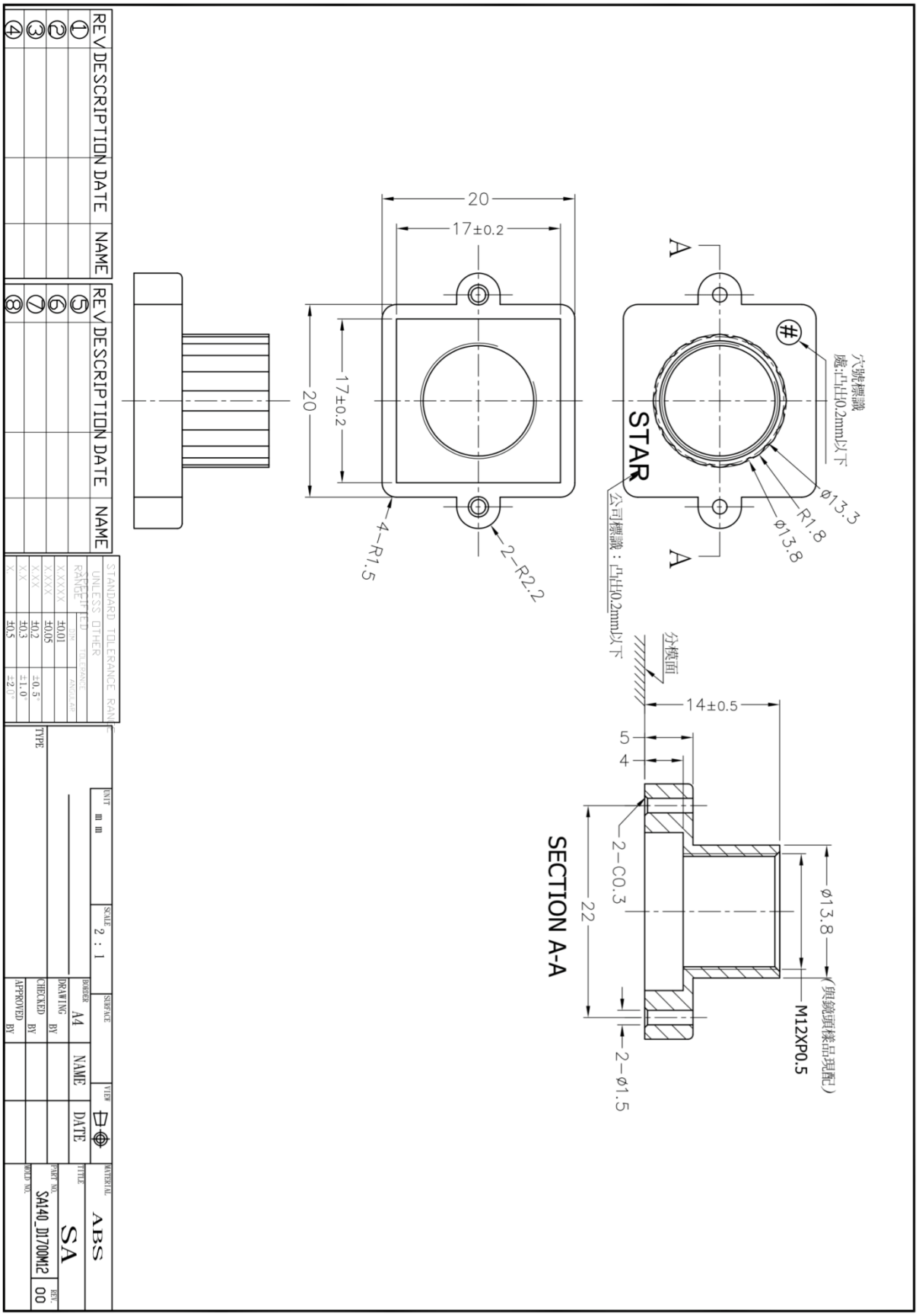

Leopard Imaging Inc.

910 Auburn Ct, Fremont, CA 94538, USA
Phone: +1-408-263-0988
Fax: +1-408-217-1960
Email: sales@leopardimaging.com
Website: www.leopardimaging.com

Revision History

Revision	Description	Release Date
1.0	First release.	05. Feb. 2020
1.1	Deleted info quoted from sensor spec.	25. May. 2022
1.2	Deleted lens model info.	03. Aug. 2023

910 Auburn Ct, Fremont, CA 94538, USA
Phone: +1-408-263-0988
Fax: +1-408-217-1960
Email:sales@leopardimaging.com
Website: www.leopardimaging.com