LI-NANO-CB-IMX219-xxxH-X
Data Sheet

Key Features

- Compatible with Nvidia® Jetson NANO™
- MIPI CSI-2 interface
- Supports up to four cameras
- Sony Diagonal 4.60 mm (Type 1/4) 8MP CMOS Image Sensor IMX219
- Active pixels: 3280 (H) x 2464 (V)
- Pixel size: 1.12 x 1.12 µm
- Color camera
- FOV H: 90° / 136°
- Supports 3264 x 2464@ 21 fps, 3264 x 1848 @ 28 fps, 1920 x 1080 @ 30 fps and 1280 x 720 @ 60 fps
- Supports PoE (options)
- I-PEX cable part#: FAW-1233-01
- Length of the I-PEX cable: 100 mm
- Supports multiple length cables
- MIPI connector part#: 20525-030E-02
- Provides driver binary and source code
- Allows customization
- Part#:

LI-NANO-CB-IMX219-xxxH-X
LI-NANO-CB-POE-IMX219-xxxH-X

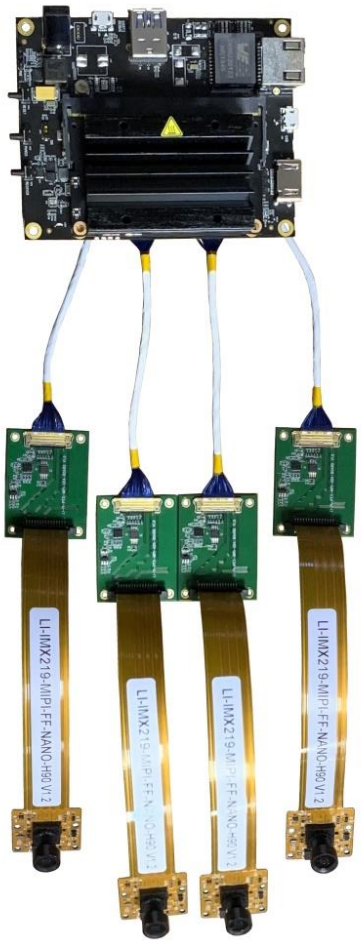

BOM

#	Items	QTY
1	LI-NANO-CB V1.2 or LI-NANO-CB-POE V1.2	1
2	Nvidia Jetson Nano SOM	1
3	LI-IMX219-MIPI-FF-NANO	1,2,3 or 4
4	LI-PI-IPEX-1233-ADPT	1,2,3 or 4
5	DC 12V power supply	1
6	USB 2.0 Type A - Micro B cable	1

Leopard Imaging Inc.

910 Auburn Ct, Fremont, CA 94538, USA
Phone: +1-408-263-0988
Fax: +1-408-217-1960
Email: sales@leopardimaging.com
Website: www.leopardimaging.com

Order Information

LI-NANO-CB-IMX219-xxxH / LI-NANO-CB-POE-IMX219-xxxH

BOM

#	Items	QTY
1	LI-NANO-CB or LI-NANO-CB-POE	1
2	Nvidia Jetson Nano SOM	1
3	LI-IMX219-MIPI-FF-NANO	1
4	LI-PI-IPEX-1233-ADPT	1
5	DC 12V power supply	1
6	USB 2.0 Micro B cable	1

LI-NANO-CB-IMX219-xxxH-D / LI-NANO-CB-POE-IMX219-xxxH-D

BOM

#	Items	QTY
1	LI-NANO-CB or LI-NANO-CB-POE	1
2	Nvidia Jetson Nano SOM	1
3	LI-IMX219-MIPI-FF-NANO	2
4	LI-PI-IPEX-1233-ADPT	2
5	DC 12V power supply	1
6	USB 2.0 Micro B cable	1

Leopard Imaging Inc.

910 Auburn Ct, Fremont, CA 94538, USA
Phone: +1-408-263-0988
Fax: +1-408-217-1960
Email: sales@leopardimaging.com
Website: www.leopardimaging.com

LI-NANO-CB-IMX219-xxxH-T / LI-NANO-CB-POE-IMX219-xxxH-T

BOM

#	Items	QTY
1	LI-NANO-CB or LI-NANO-CB-POE	1
2	Nvidia Jetson Nano SOM	1
3	LI-IMX219-MIPI-FF-NANO	3
4	LI-PI-IPEX-1233-ADPT	3
5	DC 12V power supply	1
6	USB 2.0 Micro B cable	1

LI-NANO-CB-IMX219-xxxH-Q / LI-NANO-CB-POE-IMX219-xxxH-Q

BOM

#	Items	QTY
1	LI-NANO-CB or LI-NANO-CB-POE	1
2	Nvidia Jetson Nano SOM	1
3	LI-IMX219-MIPI-FF-NANO	4
4	LI-PI-IPEX-1233-ADPT	4
5	DC 12V power supply	1
6	USB 2.0 Micro B cable	1

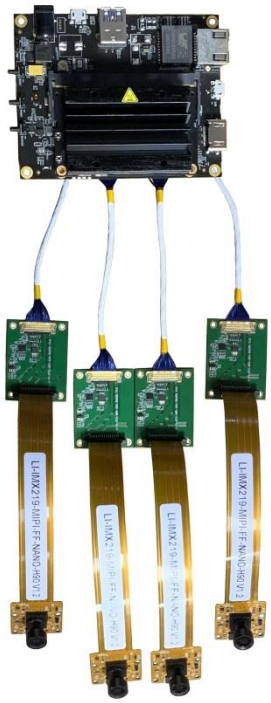

Leopard Imaging Inc.

910 Auburn Ct, Fremont, CA 94538, USA
Phone: +1-408-263-0988
Fax: +1-408-217-1960
Email: sales@leopardimaging.com
Website: www.leopardimaging.com

Register Information

Device (on LI-NANO-CB)	Switching Parameter (7-bit)
tca9548 (I2C switcher)	0x70
J13 (CAM1)	0x00
J3 (CAM2)	0x01
J25 (CAM3)	0x02
J26 (CAM4)	0x03

Device (on LI-IMX219-MIPI-FF-NANO)	I2C Address (7-bit)
IMX219 sensor	0x10

Power Consumption

Opened Cameras	Power Consumption
No camera	Around 200mA @ 12V
1 camera (3264x2464@21fps)	TBD
2 cameras (3264x2464@21fps)	TBD
3 cameras (3264x2464@21fps)	TBD
4 cameras (3264x2464@21fps)	TBD

Auto Boot

SW4	Boot Mode
ON	Manual boot
OFF	Auto boot

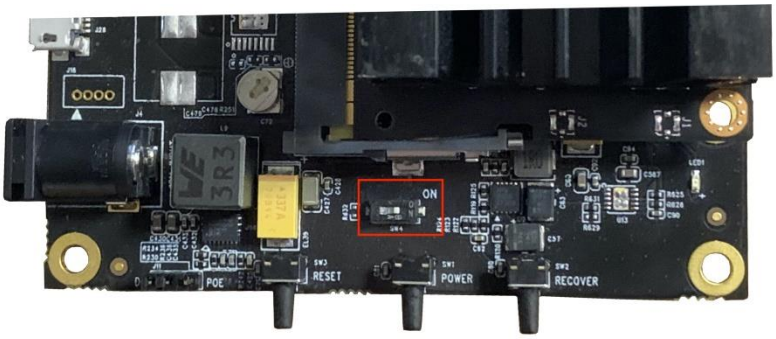

Leopard Imaging Inc.

910 Auburn Ct, Fremont, CA 94538, USA
Phone: +1-408-263-0988
Fax: +1-408-217-1960
Email: sales@leopardimaging.com
Website: www.leopardimaging.com

Dimensions

LI-NANO-CB / LI-NANO-CB-POE

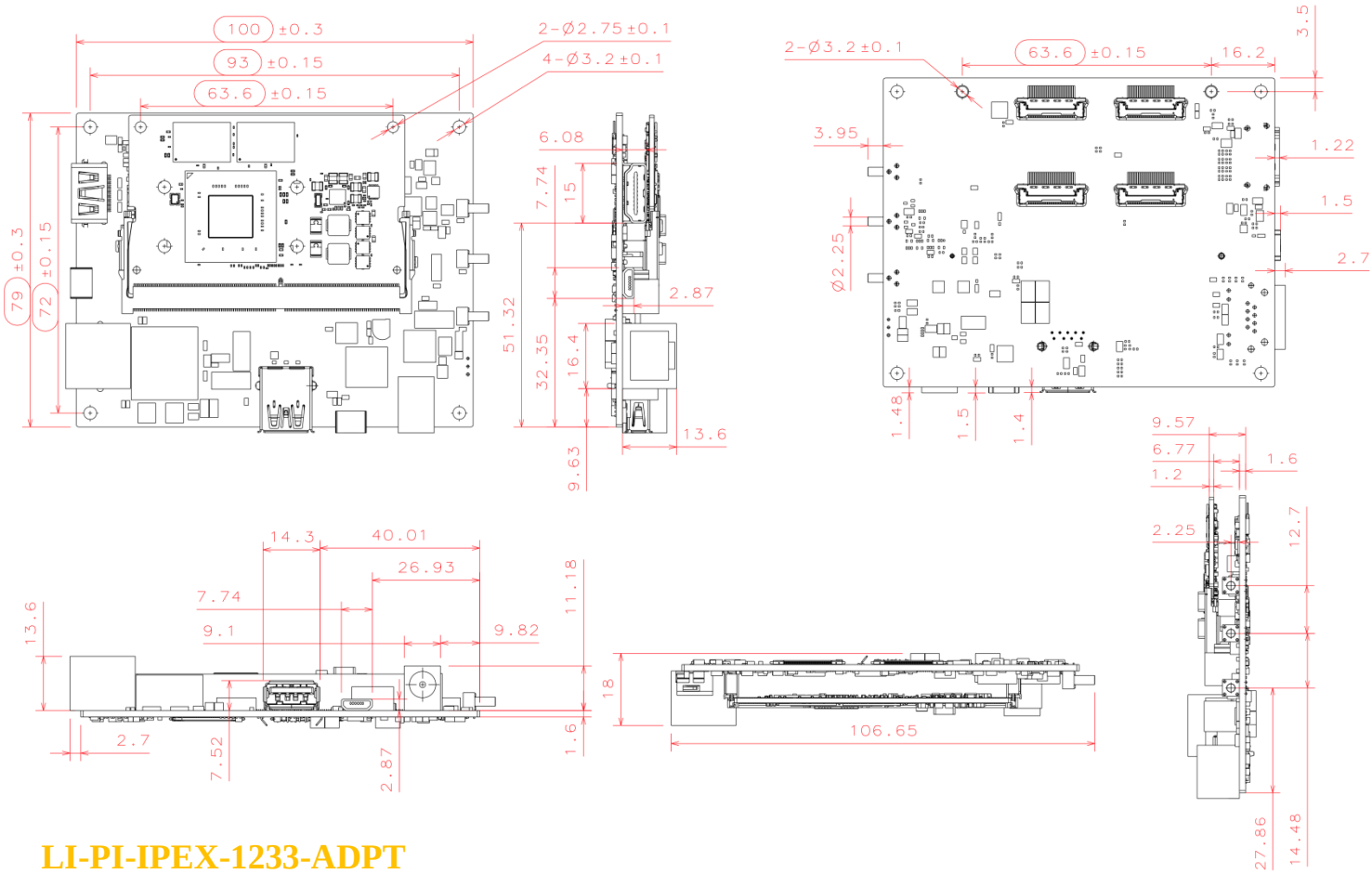

LI-PI-IPEX-1233-ADPT

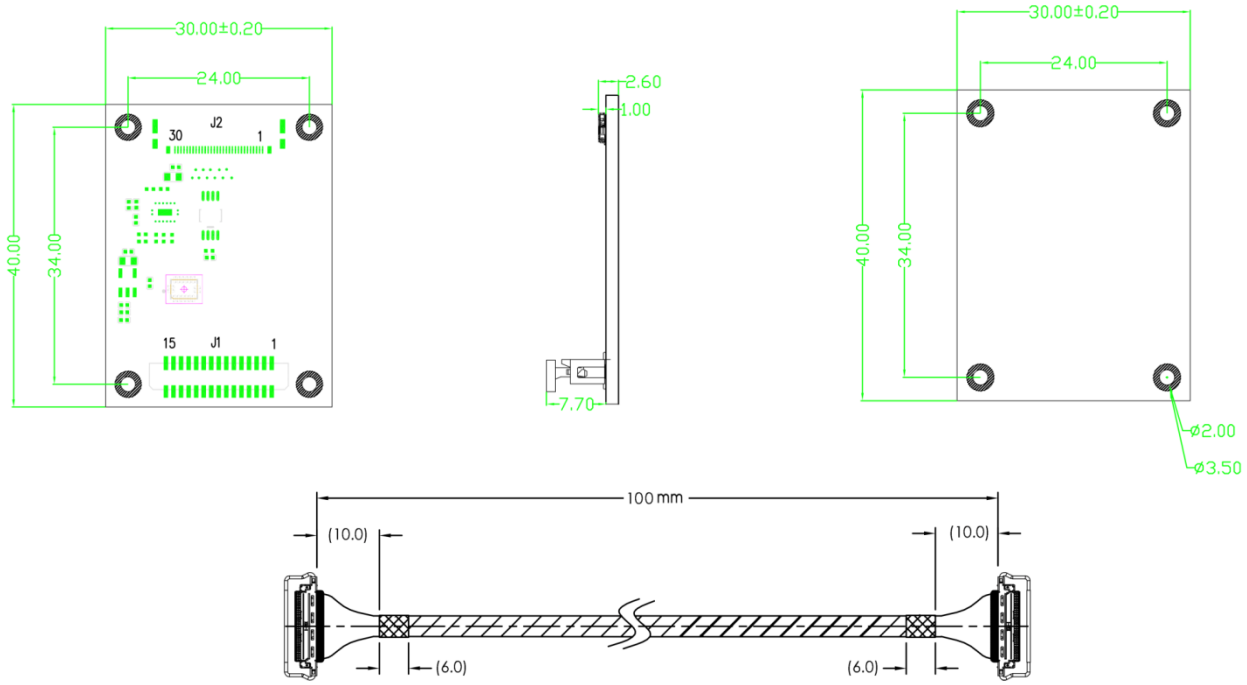

Leopard Imaging Inc.

910 Auburn Ct, Fremont, CA 94538, USA
Phone: +1-408-263-0988
Fax: +1-408-217-1960
Email: sales@leopardimaging.com
Website: www.leopardimaging.com

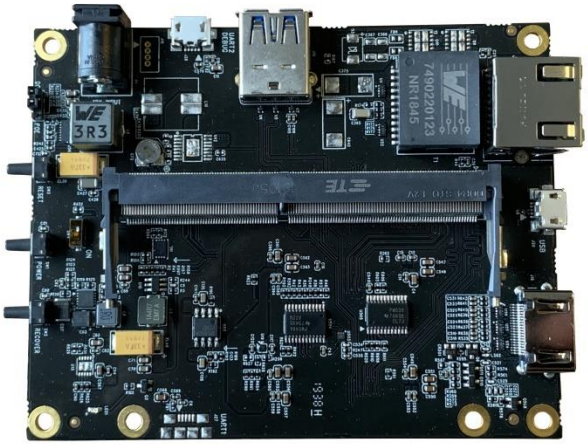

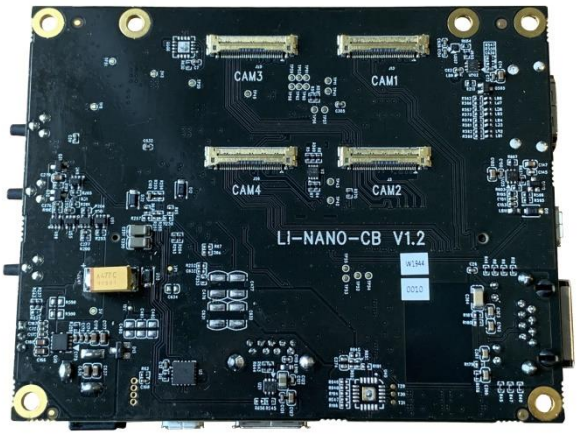

Camera Interfaces

Interface J13 (CAM1)

- Part#: 20525-030E-02
- Number of Positions: 30
- Pitch: 0.4 mm
- Mating I-PEX cable: FAW-1233-xx

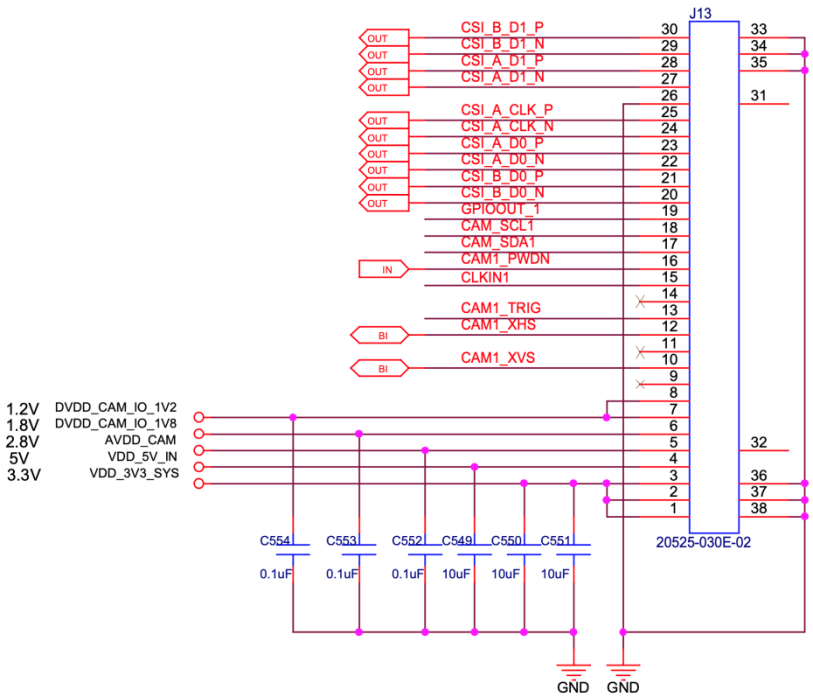

Leopard Imaging Inc.

910 Auburn Ct, Fremont, CA 94538, USA
Phone: +1-408-263-0988
Fax: +1-408-217-1960
Email: sales@leopardimaging.com
Website: www.leopardimaging.com

Interface J3 (CAM2)

- Part#: 20525-030E-02
- Number of Positions: 30
- Pitch: 0.4 mm
- Mating I-PEX cable: FAW-1233-xx

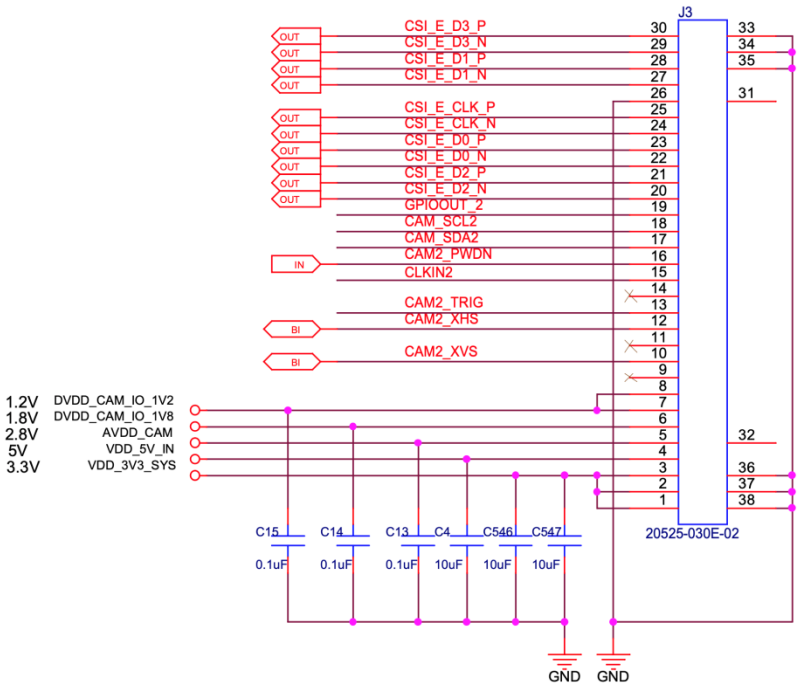

Interface J25 (CAM3)

- Part#: 20525-030E-02
- Number of Positions: 30
- Pitch: 0.4 mm
  Mating I-PEX cable: FAW-1233-xx

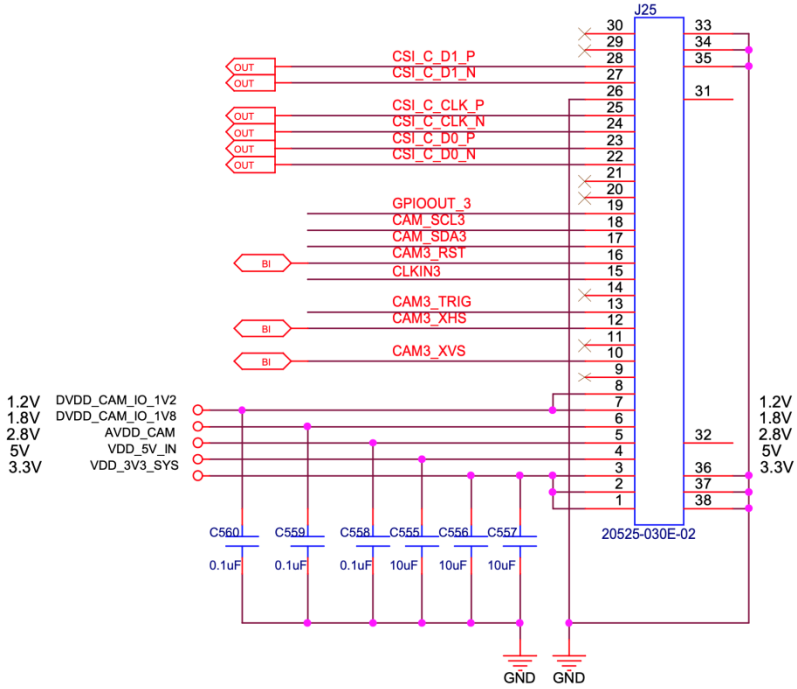

Leopard Imaging Inc.

910 Auburn Ct, Fremont, CA 94538, USA
Phone: +1-408-263-0988
Fax: +1-408-217-1960
Email: sales@leopardimaging.com
Website: www.leopardimaging.com

Interface J26 (CAM4)

- Part#: 20525-030E-02
- Number of Positions: 30
- Pitch: 0.4 mm
- Mating I-PEX cable: FAW-1233-xx

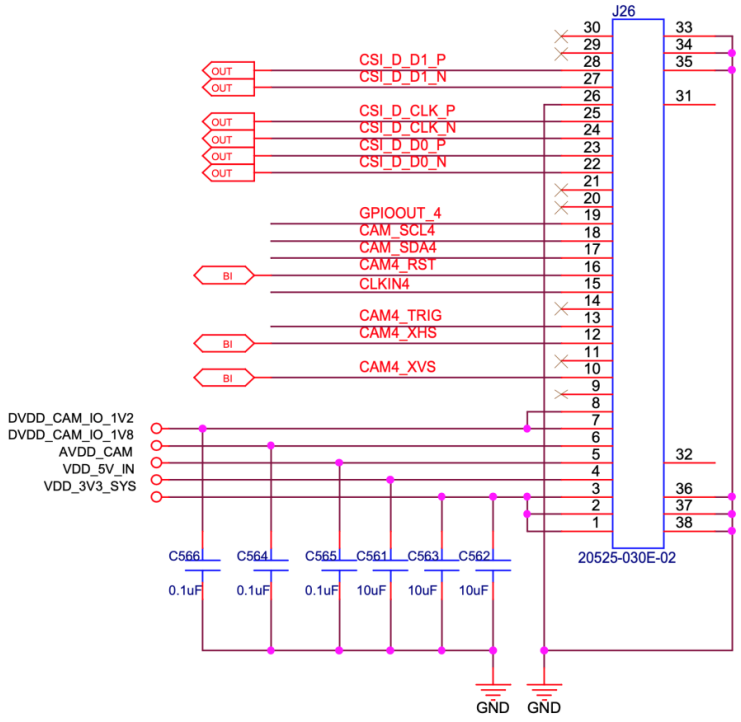

Interface J18 (I2C Header)

- Number of Positions: 4
- Pitch: 1.25 mm

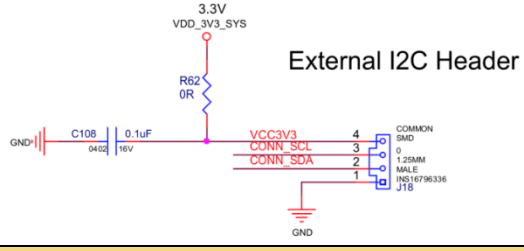

J27, J28 (UART)

- USB 2.0 micro-B interface

Note: R27 is not populated.

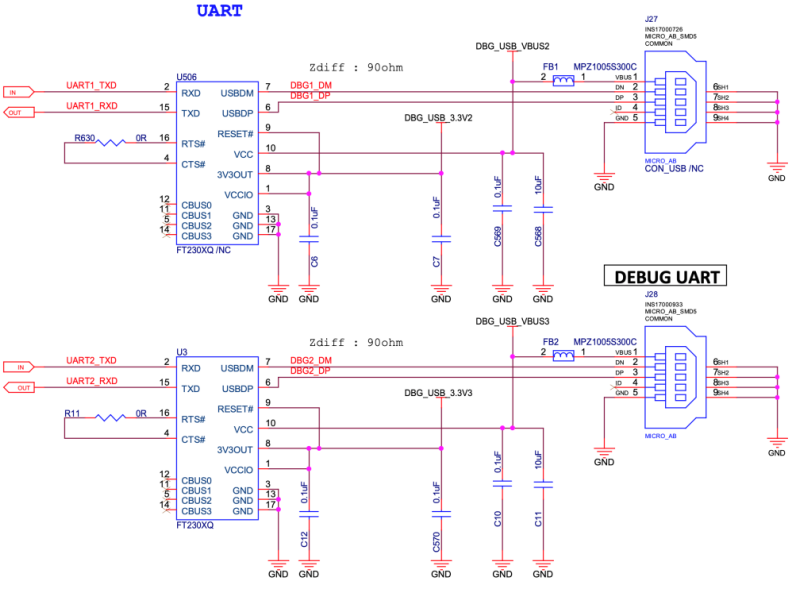

Leopard Imaging Inc.

910 Auburn Ct, Fremont, CA 94538, USA
Phone: +1-408-263-0988
Fax: +1-408-217-1960
Email: sales@leopardimaging.com
Website: www.leopardimaging.com

LI-PI-IPEX-1233-ADPT

Interface J1 (To Camera Module)

- Part#: 1-1734248-5
- Number of Positions: 15
- Pitch: 1 mm
- FFC, FCB Thickness: 0.30 mm

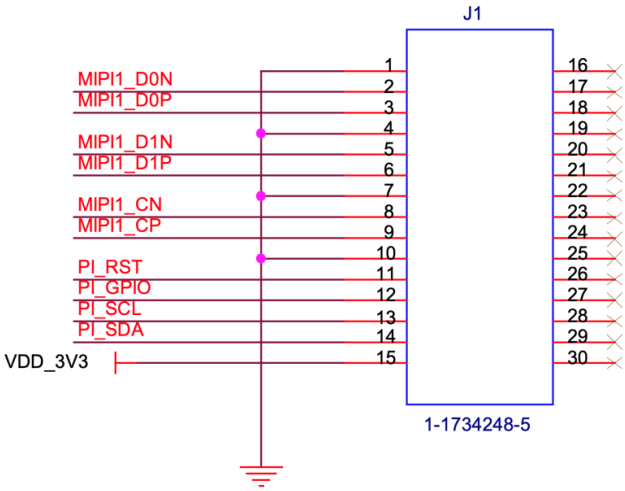

Interface J2 (To FAW-1233 Cable)

- Part#: 20525-030E-02
- Number of Positions: 30
- Pitch: 0.4 mm
- Mating I-PEX cable: FAW-1233-xx

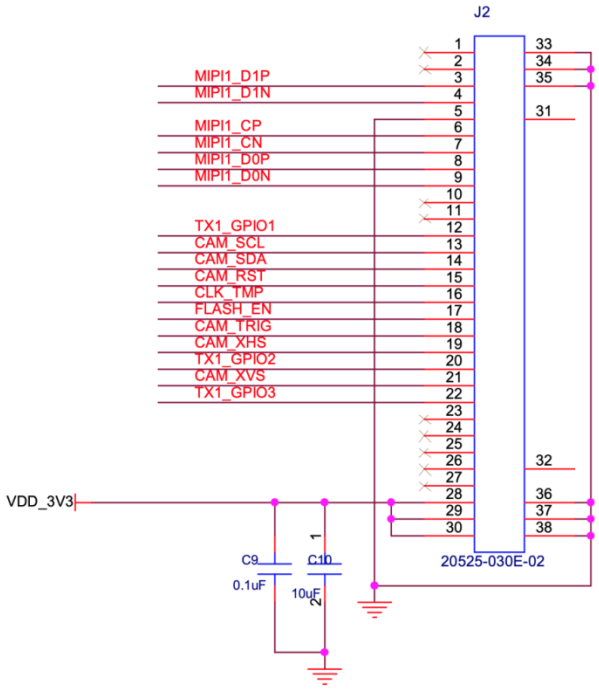

Leopard Imaging Inc.

910 Auburn Ct, Fremont, CA 94538, USA
Phone: +1-408-263-0988
Fax: +1-408-217-1960
Email: sales@leopardimaging.com
Website: www.leopardimaging.com

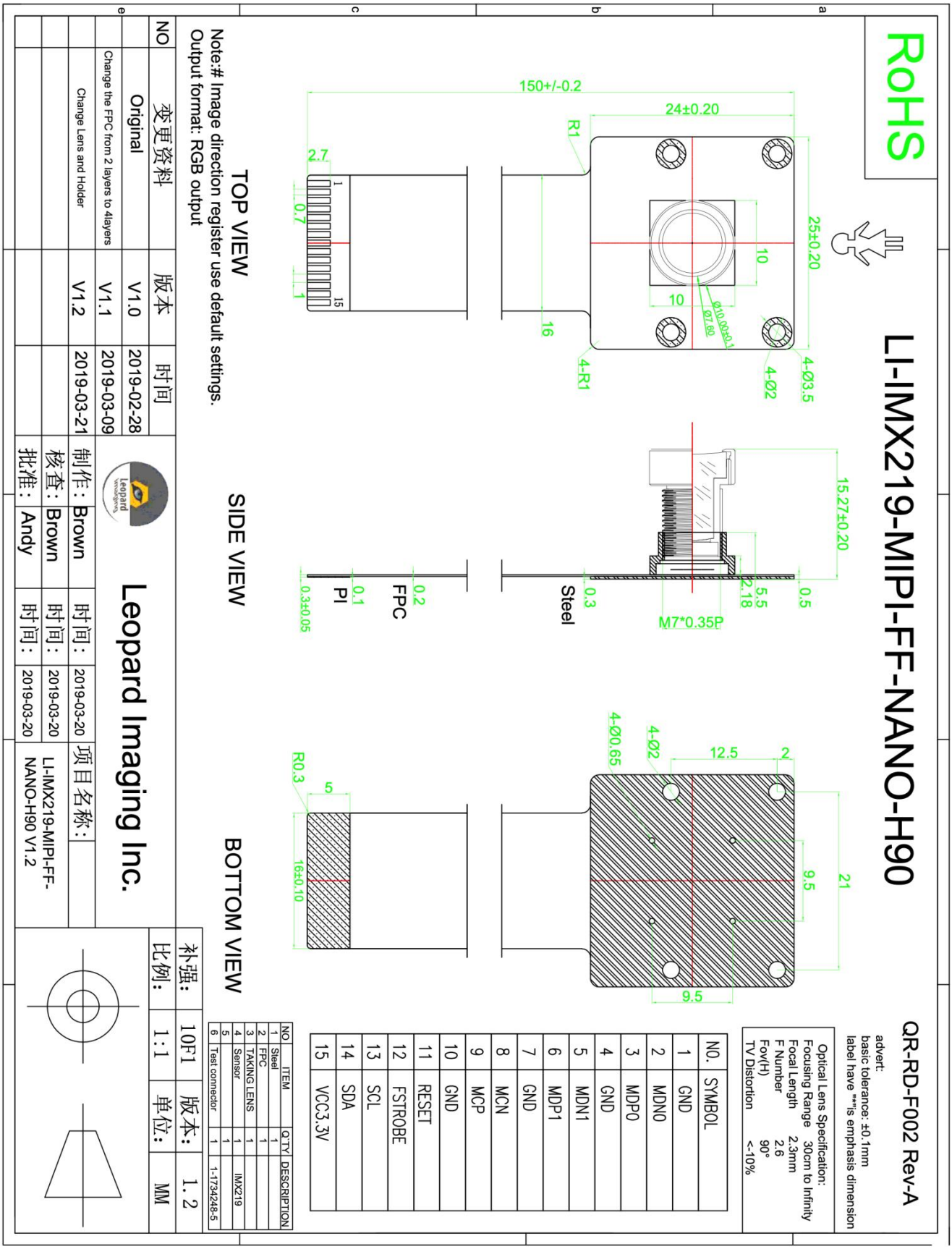

Leopard Imaging Inc.
910 Auburn Ct, Fremont, CA 94538, USA
Phone: +1-408-263-0988
Fax: +1-408-217-1960
Email: sales@leopardimaging.com
Website: www.leopardimaging.com

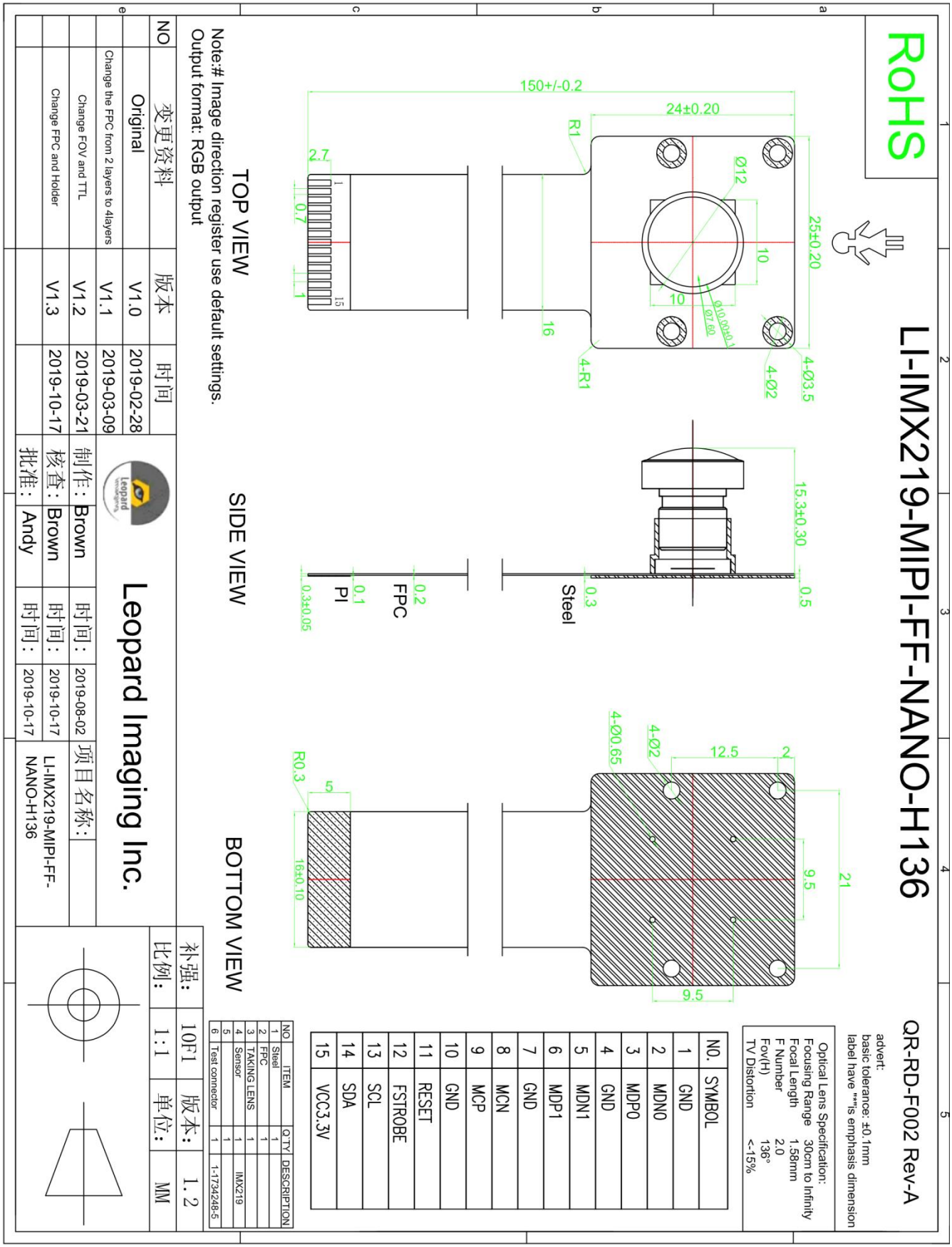

Leopard Imaging Inc.
910 Auburn Ct, Fremont, CA 94538, USA
Phone: +1-408-263-0988
Fax: +1-408-217-1960
Email: sales@leopardimaging.com
Website: www.leopardimaging.com

Revision History

Revision	Description	Release Date
1.0	First release.	03. Feb. 2020
1.1	Deleted info quoted from sensor spec.	25. May. 2022

Leopard Imaging Inc.

910 Auburn Ct, Fremont, CA 94538, USA
Phone: +1-408-263-0988
Fax: +1-408-217-1960
Email: sales@leopardimaging.com
Website: www.leopardimaging.com