LI-XAVIER-KIT-IMX265M12-X Data Sheet

Key Features

- Compatible with Nvidia® Jetson AGX Xavier™ Developer Kit
- MIPI CSI-2 interface
- Supports up to six cameras
- Two adapter board options
  - LI-JXAV-MIPI-ADPT-4CAM
  - LI-JXAV-MIPI-ADPT-6CAM-FP
- Sony Diagonal 8.9 mm (Type 1/1.8) CMOS Image Sensor IMX265
- Global shutter
- Length of the I-PEX cable: 300 mm
- Supports multiple length cables
- Allows customization
- Part#:

(1 cam) LI-XAVIER-KIT-IMX265M12
(2 cam) LI-XAVIER-KIT-IMX265M12-D
(3 cam) LI-XAVIER-KIT-IMX265M12-T
(4 cam) LI-XAVIER-KIT-IMX265M12-Q
(6 cam) LI-XAVIER-KIT-IMX265M12-H

Applications

- Industrial Applications
- Intelligent Transportation System (ITS) Cameras

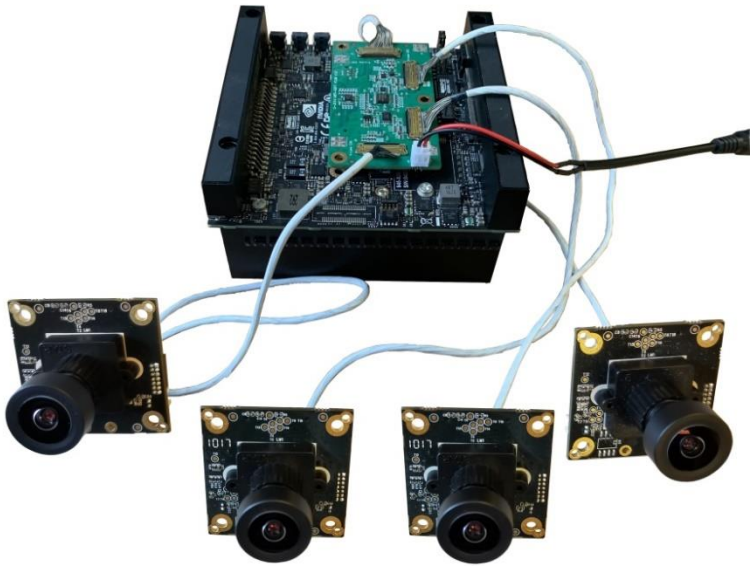

Lens Spec

- Focal Length: 5.5 mm
- Aperture, F/#: 1.8
- Built in 650 nm IR cut filter
- FOV (H): 64.5°
- TV Distortion: 2.2 %
- Mount: M12 x P0.5

BOM

Nvidia AGX Xavier Developer Kit not included

#	Items	QTY
1	LI-JXAV-MIPI-ADPT-4CAM or LI-JXAV-MIPI-ADPT-6CAM-FP	1
2	LI-IMX265-MIPI-M12	1, 2, 3, 4 or 6
3	FAW-1233-03 cable	1, 2, 3, 4 or 6

Leopard Imaging Inc.
910 Auburn Ct, Fremont, CA 94538, USA
Phone: +1-408-263-0988
Fax: +1-408-217-1960
Email:sales@leopardimaging.com
Website: www.leopardimaging.com

LI-XAVIER-KIT-IMX265M12

BOM

#	Items	QTY
1	LI-JXAV-MIPI-ADPT-4CAM	1
2	LI-IMX265-MIPI-M12	1
3	FAW-1233-03 cable	1

LI-XAVIER-KIT-IMX265M12-D

BOM

#	Items	QTY
1	LI-JXAV-MIPI-ADPT-4CAM	1
2	LI-IMX265-MIPI-M12	2
3	FAW-1233-03 cable	2

LI-XAVIER-KIT-IMX265M12-T

BOM

#	Items	QTY
1	LI-JXAV-MIPI-ADPT-4CAM	1
2	LI-IMX265-MIPI-M12	3
3	FAW-1233-03 cable	3

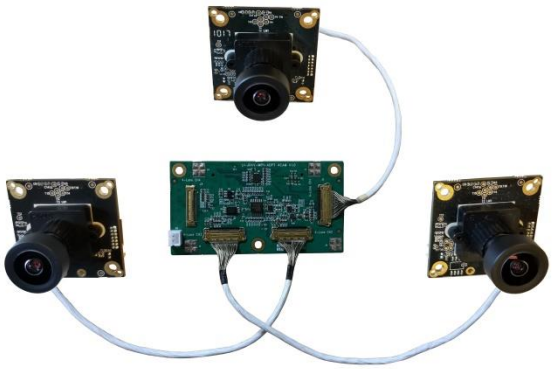

LI-XAVIER-KIT-IMX265M12-Q

BOM

#	Items	QTY
1	LI-JXAV-MIPI-ADPT-4CAM	1
2	LI-IMX265-MIPI-M12	4
3	FAW-1233-03 cable	4

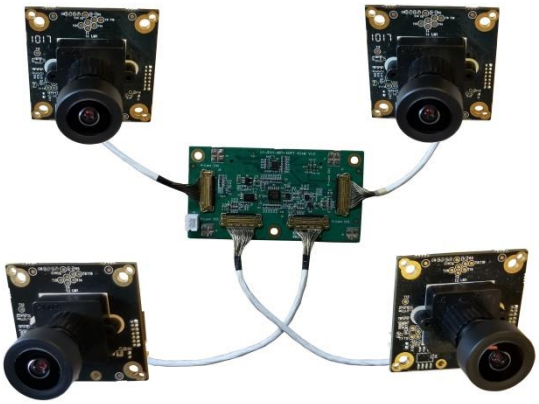

Leopard Imaging Inc.

910 Auburn Ct, Fremont, CA 94538, USA
Phone: +1-408-263-0988
Fax: +1-408-217-1960
Email:sales@leopardimaging.com
Website: www.leopardimaging.com

LI-XAVIER-KIT-IMX265M12-H

BOM

#	Items	QTY
1	LI-JXAV-MIPI-ADPT-**6CAM-FP**	1
2	LI-IMX265-MIPI-M12	6
3	FAW-1233-03 cable	6

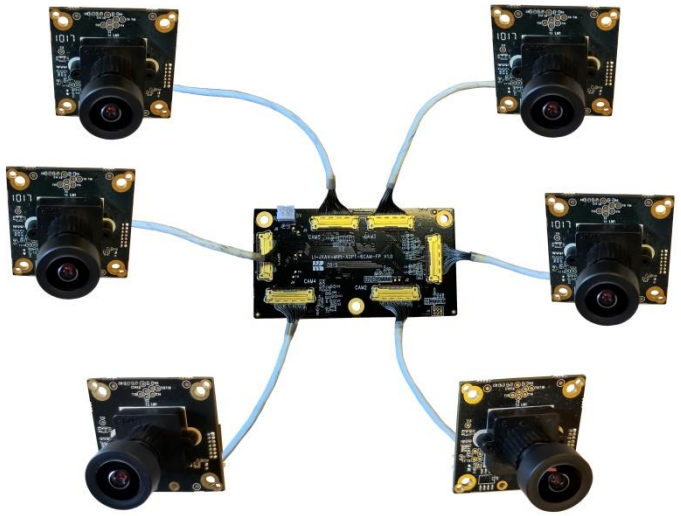

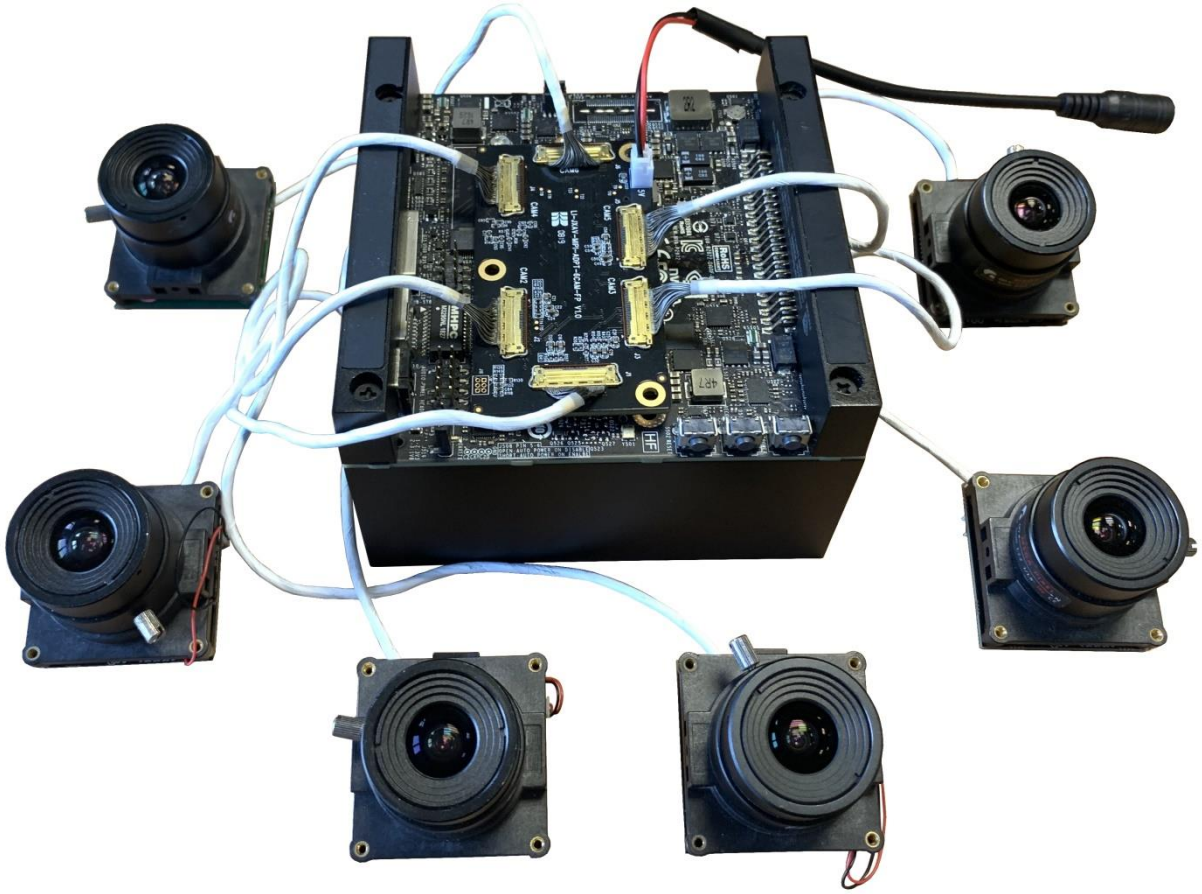

Leopard Imaging Inc.

910 Auburn Ct, Fremont, CA 94538, USA
Phone: +1-408-263-0988
Fax: +1-408-217-1960
Email:sales@leopardimaging.com
Website: www.leopardimaging.com

Dimensions

LI-IMX265-MIPI-M12

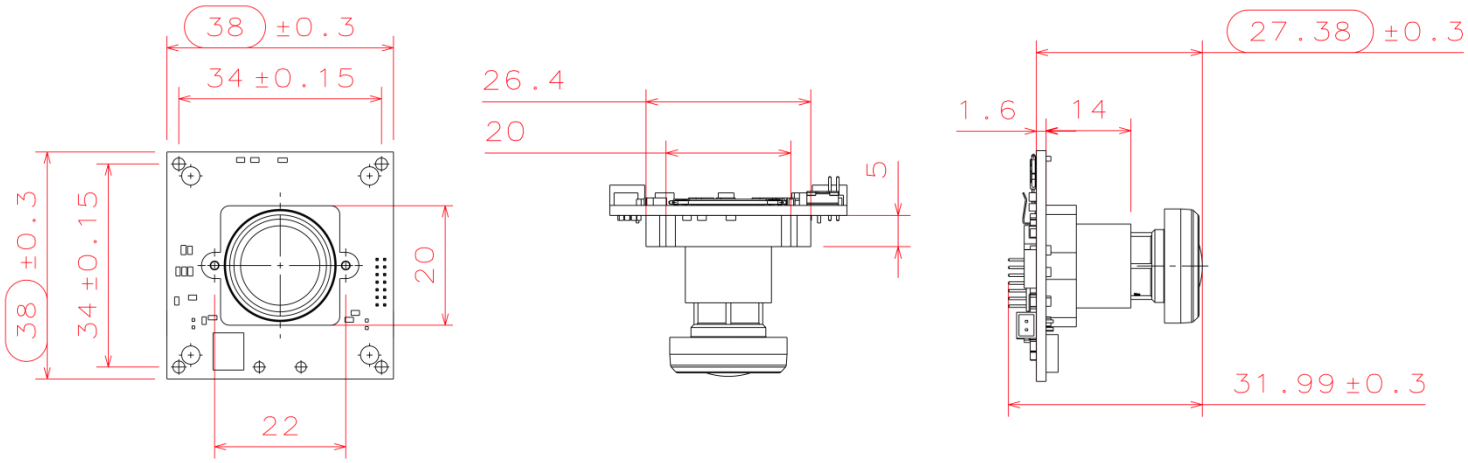

LI-JXAV-MIPI-ADPT-4CAM

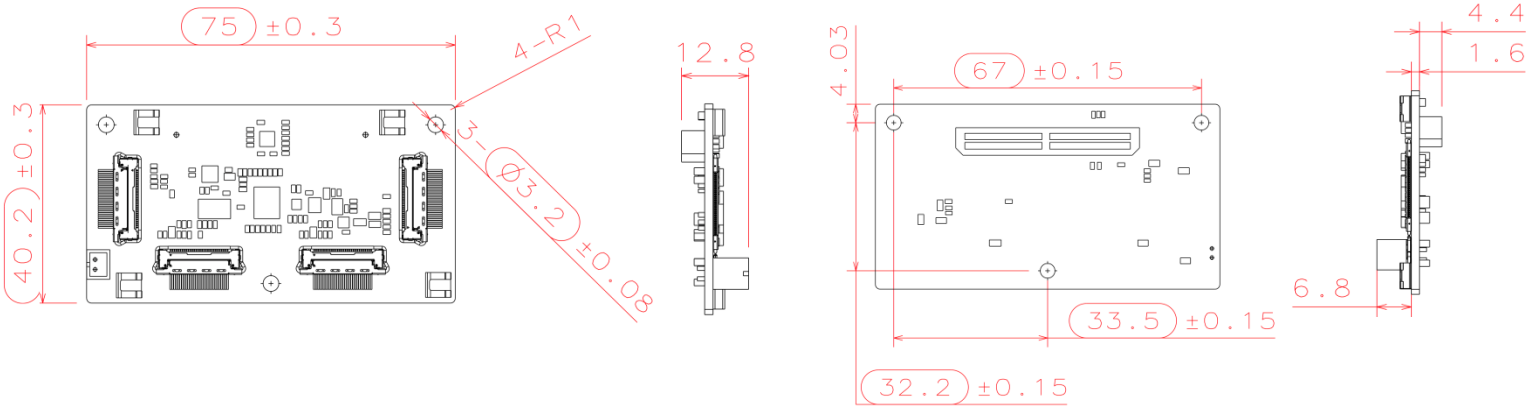

FAW-1233-03

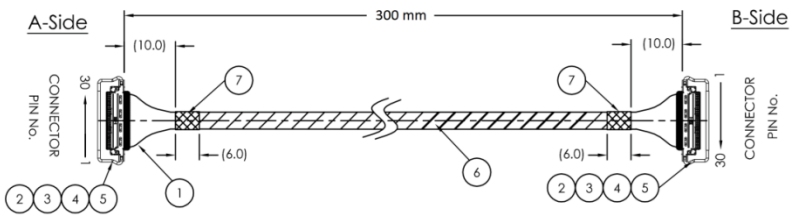

Leopard Imaging Inc.

910 Auburn Ct, Fremont, CA 94538, USA
Phone: +1-408-263-0988
Fax: +1-408-217-1960
Email: sales@leopardimaging.com
Website: www.leopardimaging.com

LI-JXAV-MIPI-ADPT-4CAM

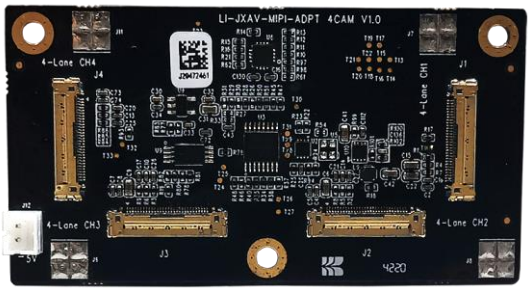

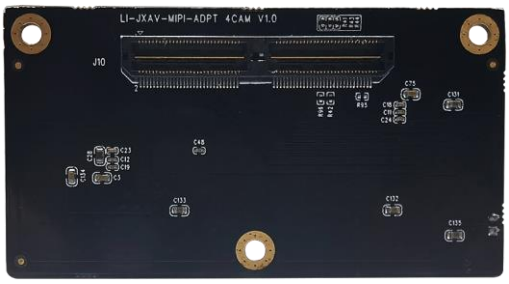

Interfaces

Interface J1

- Part#: 20525-030E-02
- Number of Positions: 30
- Pitch: 0.4 mm
- Mating I-PEX cable: FAW-1233-03 (300 mm)

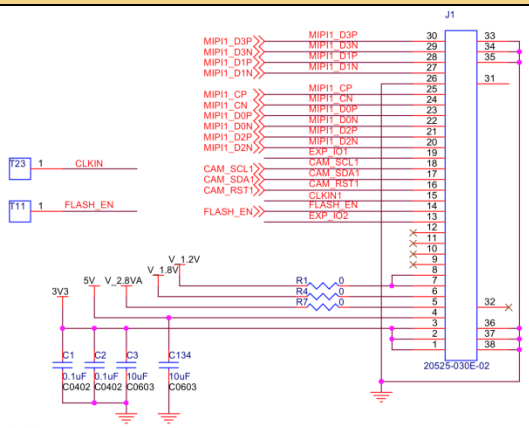

Interface J2

- Part#: 20525-030E-02
- Number of Positions: 30
- Pitch: 0.4 mm
- Mating I-PEX cable: FAW-1233-03 (300 mm)

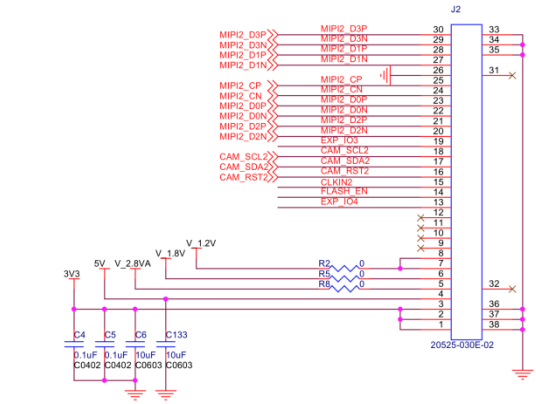

Interface J3

- Part#: 20525-030E-02
- Number of Positions: 30
- Pitch: 0.4 mm
- Mating I-PEX cable: FAW-1233-03 (300 mm)

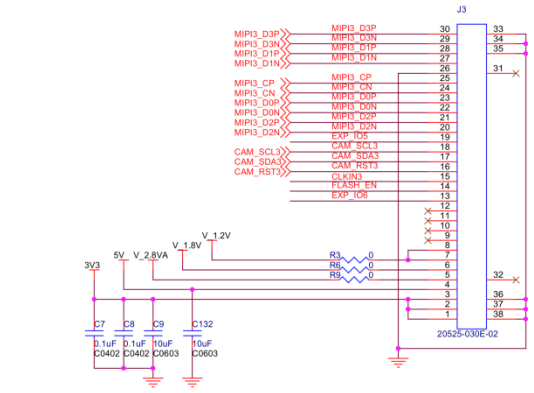

Leopard Imaging Inc.

910 Auburn Ct, Fremont, CA 94538, USA
Phone: +1-408-263-0988
Fax: +1-408-217-1960
Email: sales@leopardimaging.com
Website: www.leopardimaging.com

Interface J4

- Part#: 20525-030E-02
- Number of Positions: 30
- Pitch: 0.4 mm
- Mating I-PEX cable: FAW-1233-03 (300 mm)

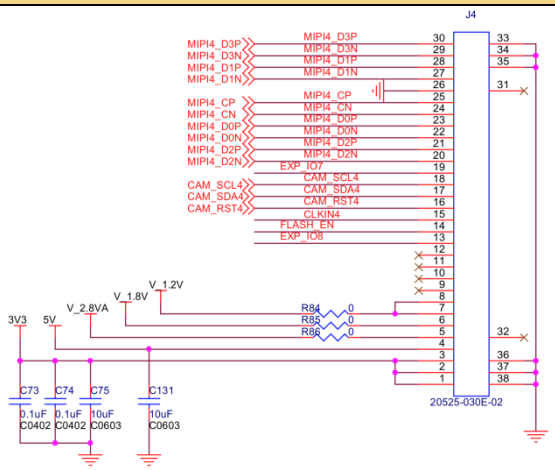

Interface J5

- Part#: 0894000220
- Number of Positions: 2
- Pitch: 2 mm

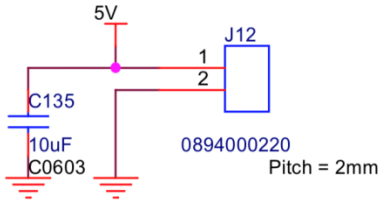

Interface J10

- Part#: QTH-060-01-L-D-A
- Number of Positions: 120
- Number of Rows: 2
- Pitch: 0.5 mm

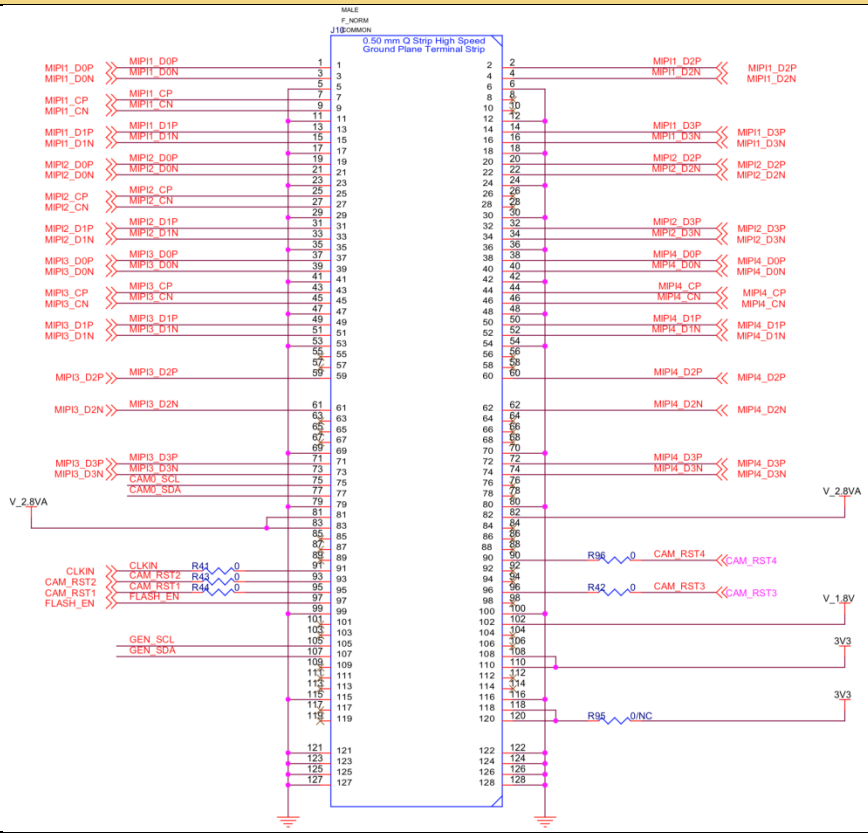

Leopard Imaging Inc.

910 Auburn Ct, Fremont, CA 94538, USA
Phone: +1-408-263-0988
Fax: +1-408-217-1960
Email:sales@leopardimaging.com
Website: www.leopardimaging.com

LI-JXAV-MIPI-ADPT-6CAM-FP

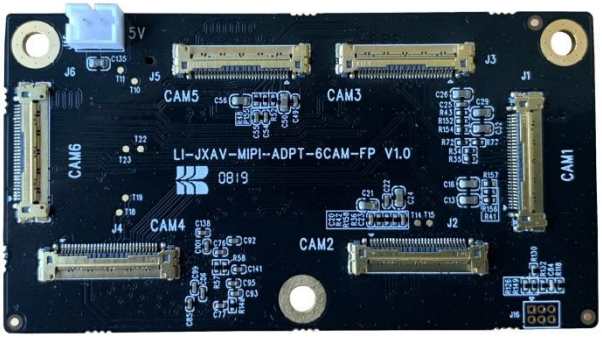

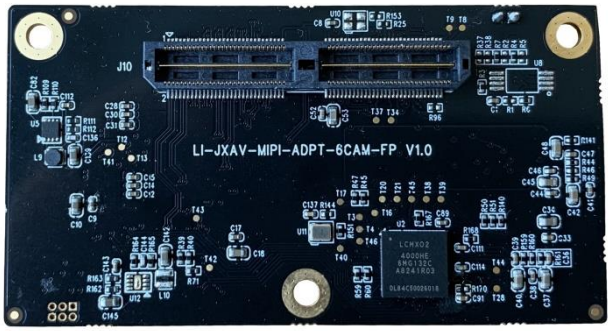

Interfaces

Interface J1 (Camera Channel 1)

- Part#: 20525-030E-02
- Number of Positions: 30
- Pitch: 0.4 mm
- Mating I-PEX cable: FAW-1233-xx

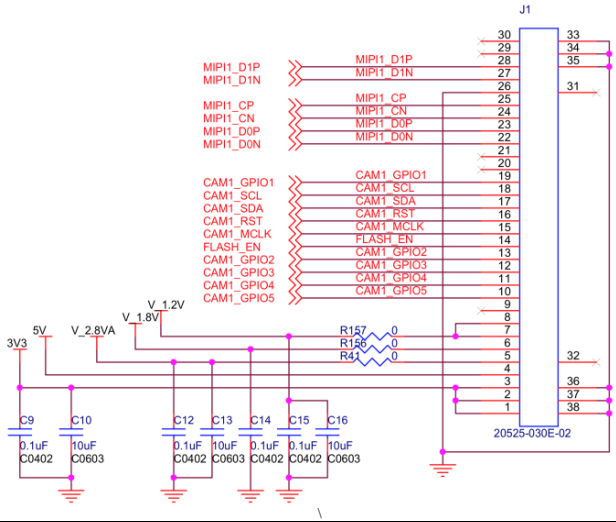

Interface J2 (Camera Channel 2)

- Part#: 20525-030E-02
- Number of Positions: 30
- Pitch: 0.4 mm
- Mating I-PEX cable: FAW-1233-xx

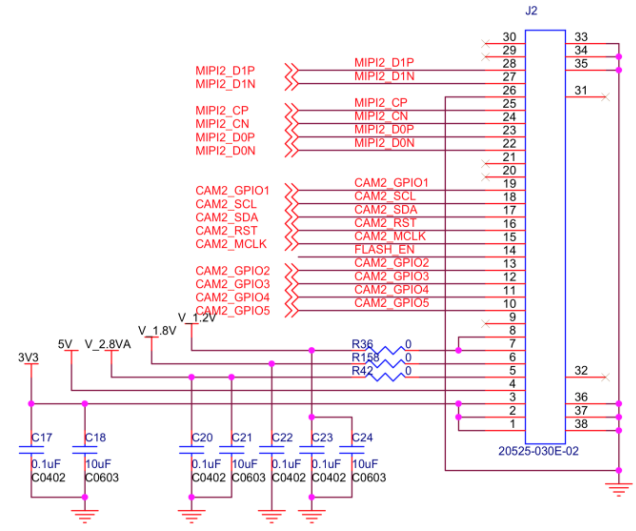

Leopard Imaging Inc.

910 Auburn Ct, Fremont, CA 94538, USA
Phone: +1-408-263-0988
Fax: +1-408-217-1960
Email:sales@leopardimaging.com
Website: www.leopardimaging.com

Interface J3 (Camera Channel 3)

- Part#: 20525-030E-02
- Number of Positions: 30
- Pitch: 0.4 mm
- Mating I-PEX cable: FAW-1233-xx

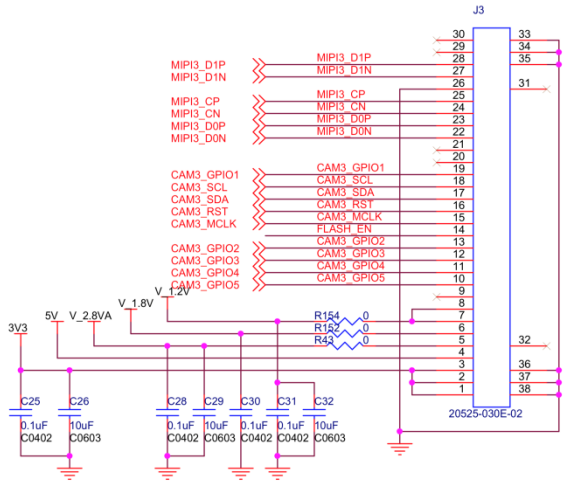

Interface J4 (Camera Channel 4)

- Part#: 20525-030E-02
- Number of Positions: 30
- Pitch: 0.4 mm
- Mating I-PEX cable: FAW-1233-xx

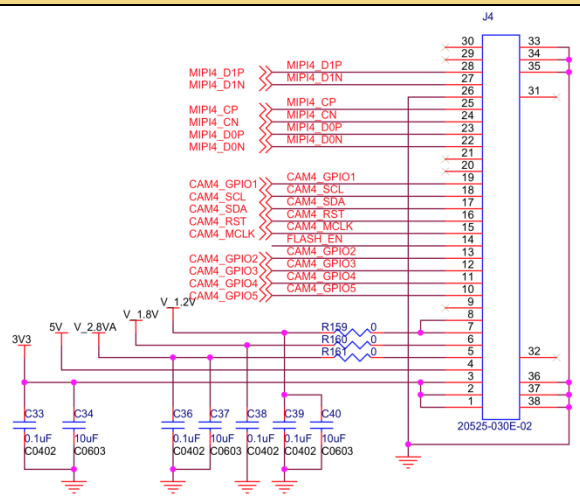

Interface J5 (Camera Channel 5)

- Part#: 20525-030E-02
- Number of Positions: 30
- Pitch: 0.4 mm
- Mating I-PEX cable: FAW-1233-xx

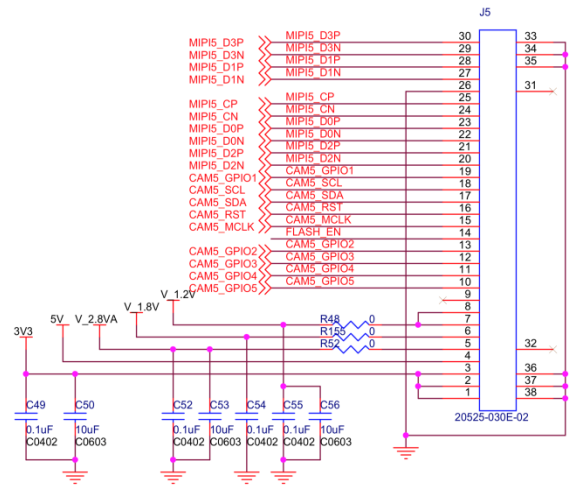

Leopard Imaging Inc.

910 Auburn Ct, Fremont, CA 94538, USA
Phone: +1-408-263-0988
Fax: +1-408-217-1960
Email:sales@leopardimaging.com
Website: www.leopardimaging.com

Interface J6 (Camera Channel 6)

- Part#: 20525-030E-02
- Number of Positions: 30
- Pitch: 0.4 mm
- Mating I-PEX cable: FAW-1233-xx

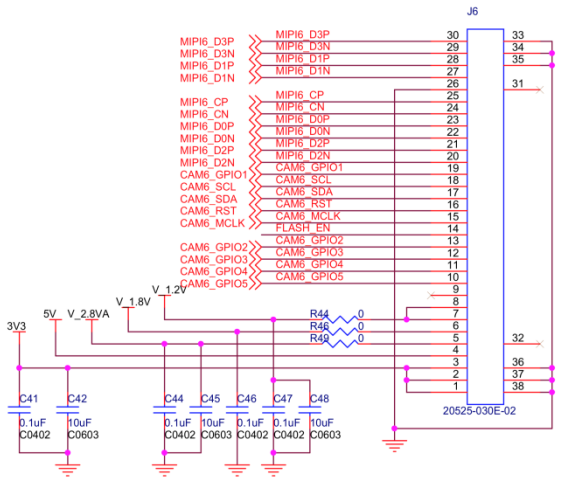

Interface J16 (FPGA Programming Interface)

- Part#: 20021311-00006T4LF
- Number of Positions: 6
- Pitch: 0.050" (1.27 mm)
- Number of Rows: 2

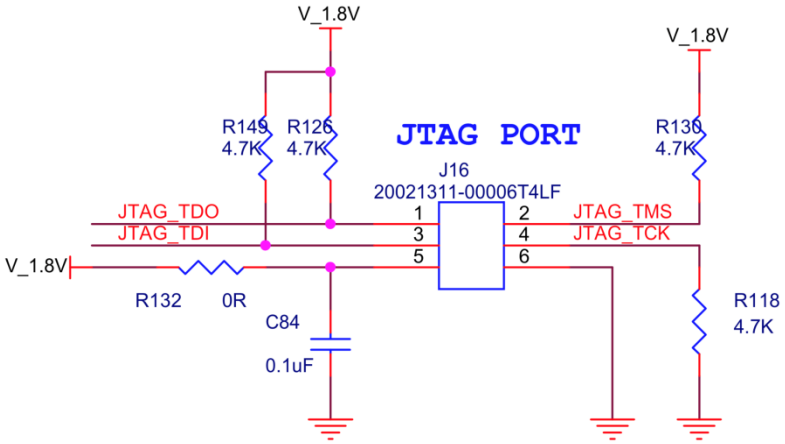

Interface J15 (External Power Input Interface)

- Part#: 0894000220
- Number of Positions: 2
- Pitch: 2 mm

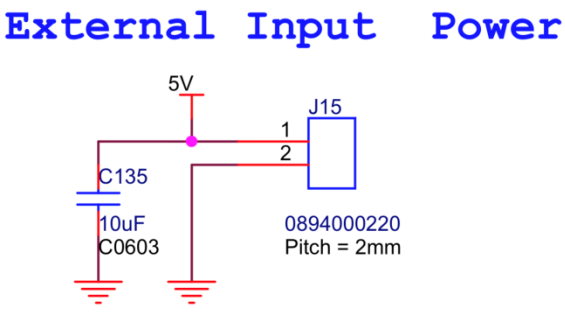

Leopard Imaging Inc.

910 Auburn Ct, Fremont, CA 94538, USA
Phone: +1-408-263-0988
Fax: +1-408-217-1960
Email:sales@leopardimaging.com
Website: www.leopardimaging.com

Interface J10 (To Xavier)

- Part#: QTH-060-01-L-D-A
- Number of Positions: 120
- Number of Rows: 2
- Pitch: 0.5 mm

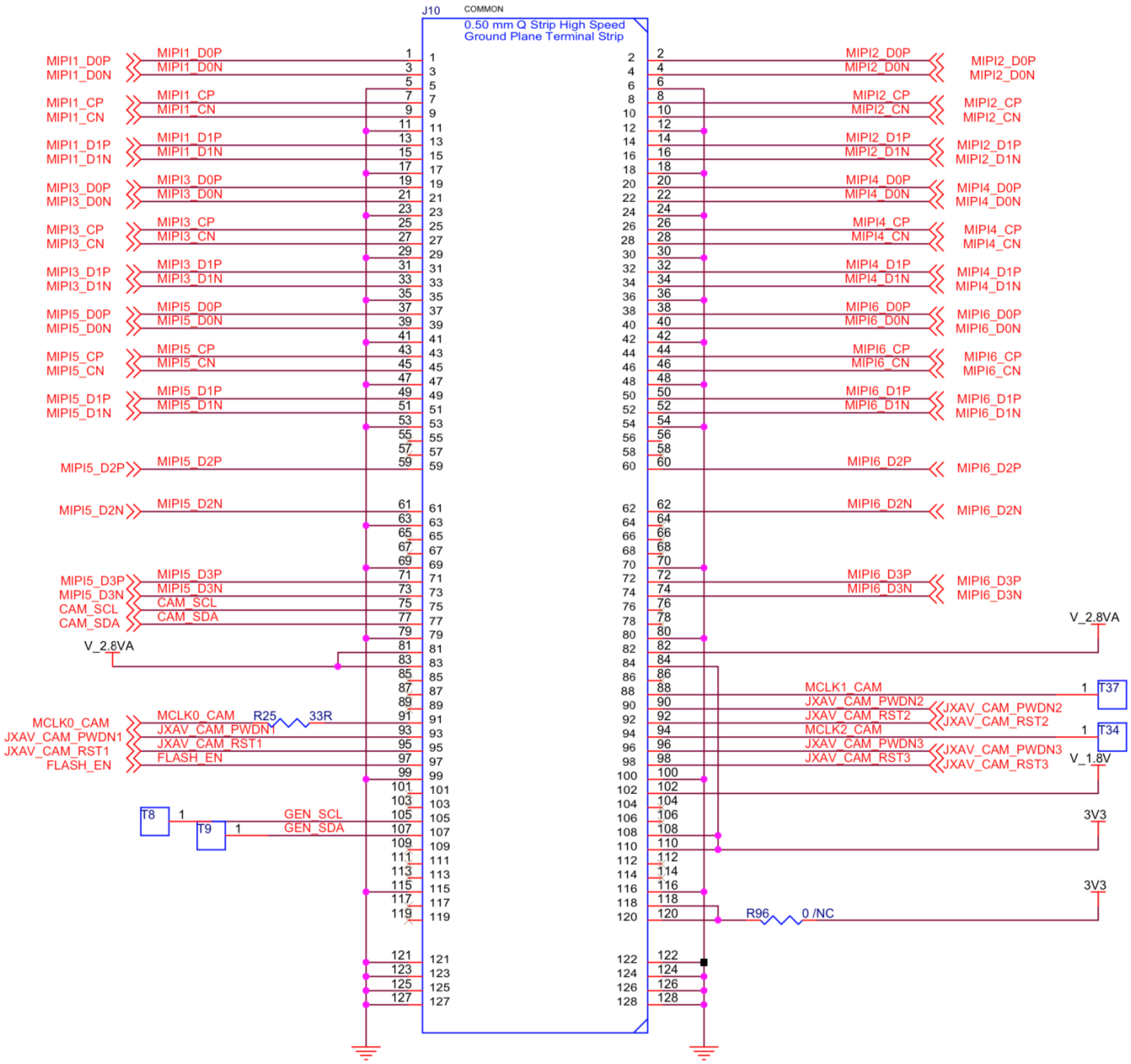

Leopard Imaging Inc.

910 Auburn Ct, Fremont, CA 94538, USA
Phone: +1-408-263-0988
Fax: +1-408-217-1960
Email:sales@leopardimaging.com
Website: www.leopardimaging.com

LI-IMX265-MIPI-M12

Camera Spec	
Image sensor	Sony Diagonal 8.9 mm (Type 1/1.8) CMOS Image Sensor IMX265
Optical format	1/1.8"
Number of active pixels	2064 (H) x 1544 (V)
Pixel size	3.45 x 3.45 µm
Color or Mono	Color
Interface	MIPI interface
Lens mount	M12
Weight	~ 15 g
Interfaces	
Interface J4: ▪ Part#: 20525-030E-02 ▪ Number of Positions: 30 ▪ Pitch: 0.4 mm ▪ Mating I-PEX cable: FAW-1233-03 (300 mm)	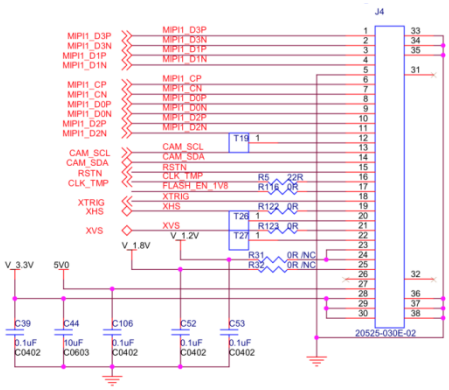
Interface J8: ▪ Part#: 1734829-2 ▪ Number of Positions: 2 ▪ Pitch: 1.25 mm	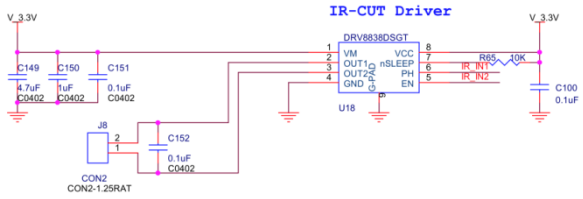
Interface J2: ▪ Part#: 20021321-00010C4LF ▪ Number of Positions: 10 ▪ Pitch: 1.27 mm	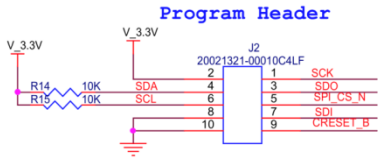
Interface J3: ▪ Part#: 20021321-00006C4LF ▪ Number of Positions: 6 ▪ Pitch: 1.27 mm	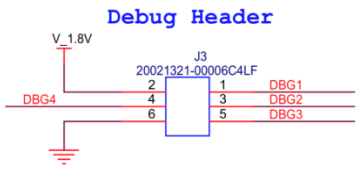

Leopard Imaging Inc.

910 Auburn Ct, Fremont, CA 94538, USA
Phone: +1-408-263-0988
Fax: +1-408-217-1960
Email: sales@leopardimaging.com
Website: www.leopardimaging.com

Revision History

Revision	Description	Release Date
1.0	First release.	02. Aug. 2019
1.1	Deleted info quoted from sensor spec.	25. May. 2022
1.2	Deleted lens model info.	04. Aug. 2023

910 Auburn Ct, Fremont, CA 94538, USA
Phone: +1-408-263-0988
Fax: +1-408-217-1960
Email:sales@leopardimaging.com
Website: www.leopardimaging.com