LI-JETSON-KIT-IMX577M12-X

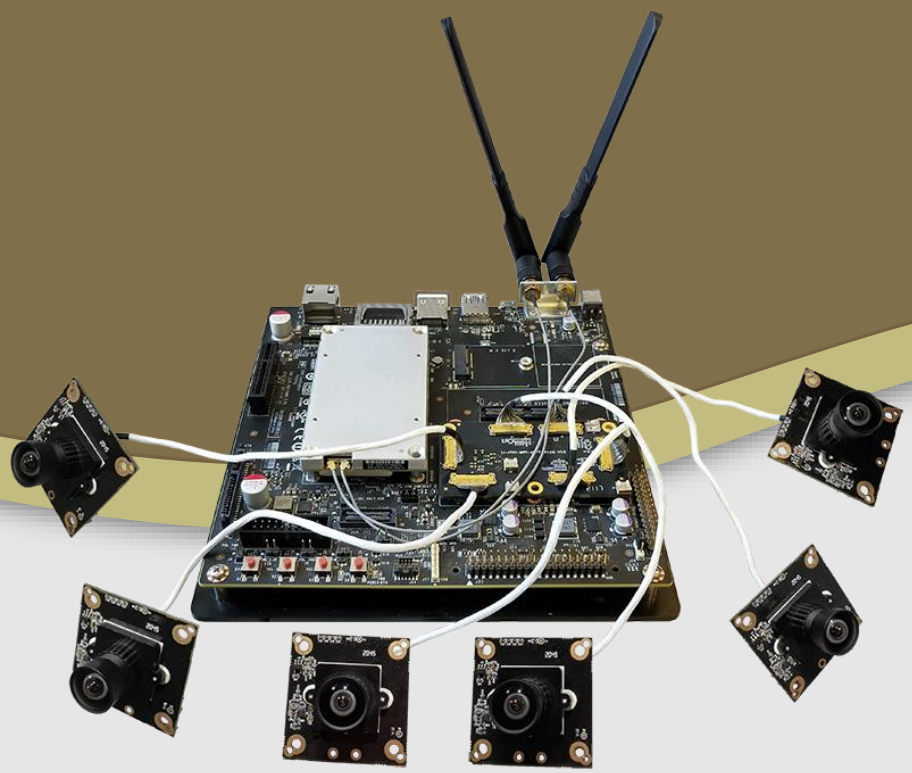

Address:
910 Auburn Ct
Fremont, CA 94538
USA

Phone:
+1 (408)263-0988
Fax:
+1 (408)217-1960

Sales:
sales@leopardimaging.com
Support:
support@leopardimaging.com

KEY FEATURES

- Compatible with Nvidia Jetson TX1/TX2 Development Kit (Nvidia TX1/TX2 Development Kit not included)
- MIPI CSI-2 interface
- Supports up to six cameras
- Two adapter board options:

LI-JTX1-MIPI-ADPT	Includes three 4-lane interfaces
LI-JTX1-MIPI-ADPT-6CAM	Includes six 2-lane interfaces

- Sensor: Sony Diagonal 7.857 mm (Type 1/2.3) CMOS Image Sensor IMX577
- Active pixels: 4056 (H) x 3040 (V)
- Pixel size: 1.55 x 1.55 µm
- Color camera
- I-PEX cable part#: FAW-1233-03
- Length of the I-PEX cable: ~ 300 mm
- Supports multiple length cables
- MIPI connector part#: 20525-030E-02
- Supports M12 x P0.5 lens
- Allows customization
- Part#: LI-JETSON-KIT-IMX577M12-X

LENS SPECIFICATIONS

Effective Focal Length	3.25 mm ± 5%
Aperture, F/#	2.60 ± 5%
Field of View (FOV)	101.6˚ diagonal
	88.5˚ horizontal
	71.6˚ vertical
TV Distortion	< -0.6%
Relative Illumination	> 58.98%
IR Filter	650 nm IR cut filter
Lens Mount	M12 x P0.5

BOM

Nvidia TX1/TX2 Development Kit not included.

#	Items	QTY
1	LI-JTX1-MIPI-ADPT or LI-JTX1-MIPI-ADPT-6CAM	1
2	LI-IMX577-MIPI-M12	1, 2, 3 or 6
3	FAW-1233-03 cable	1, 2, 3 or 6

PART# DETAILS

LI-JETSON-KIT-IMX577M12-X

1 Cam	LI-JETSON-KIT-IMX577M12
2 Cam	LI-JETSON-KIT-IMX577M12-D
3 Cam	LI-JETSON-KIT-IMX577M12-T
6 Cam	LI-JETSON-KIT-IMX577M12-H

BOM DETAILS

LI-JETSON-KIT-IMX577M12

#	Items	QTY
1	LI-JTX1-MIPI-ADPT	1
2	LI-IMX577-MIPI-M12	1
3	FAW-1233-03 cable	1

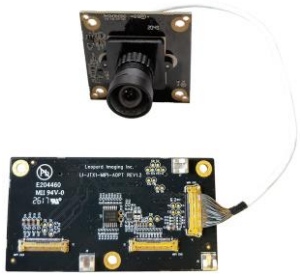

LI-JETSON-KIT-IMX577M12-D

#	Items	QTY
1	LI-JTX1-MIPI-ADPT	1
2	LI-IMX577-MIPI-M12	2
3	FAW-1233-03 cable	2

LI-JETSON-KIT-IMX577M12-T

#	Items	QTY
1	LI-JTX1-MIPI-ADPT	1
2	LI-IMX577-MIPI-M12	3
3	FAW-1233-03 cable	3

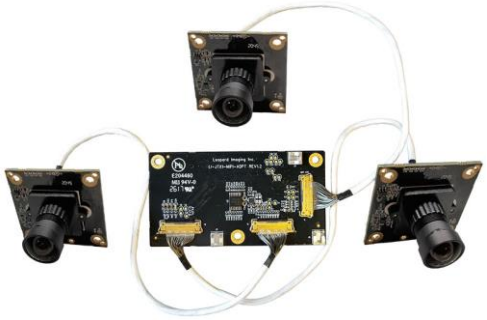

LI-JETSON-KIT-IMX577M12-H

#	Items	QTY
1	LI-JTX1-MIPI-ADPT-6CAM	1
2	LI-IMX577-MIPI-M12	6
3	FAW-1233-03 cable	6

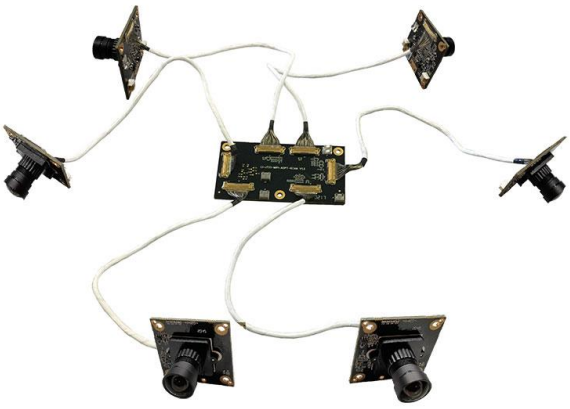

LI-JTX1-MIPI-ADPT

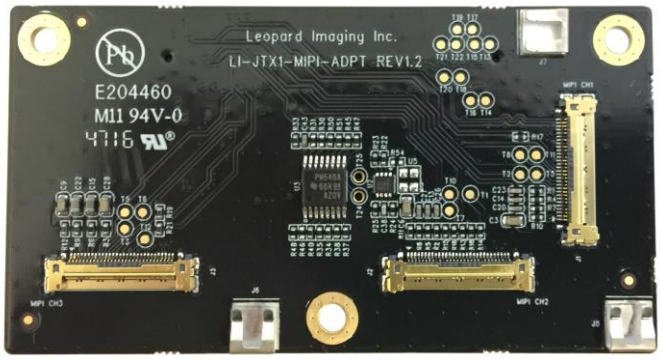

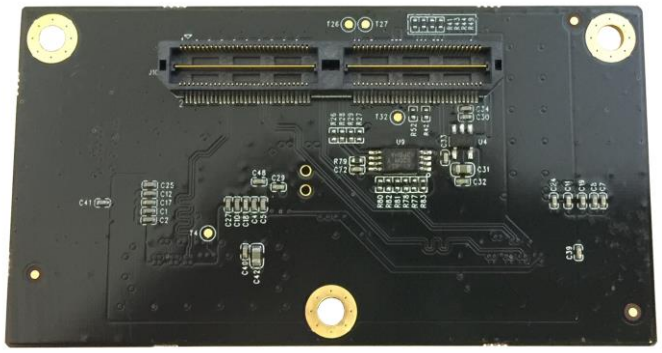

INTERFACES

Interface J1

- Part#: 20525-030E-02
- Number of Positions: 30
- Pitch: 0.4 mm
- Mating I-PEX cable: FAW-1233-03 (300 mm)

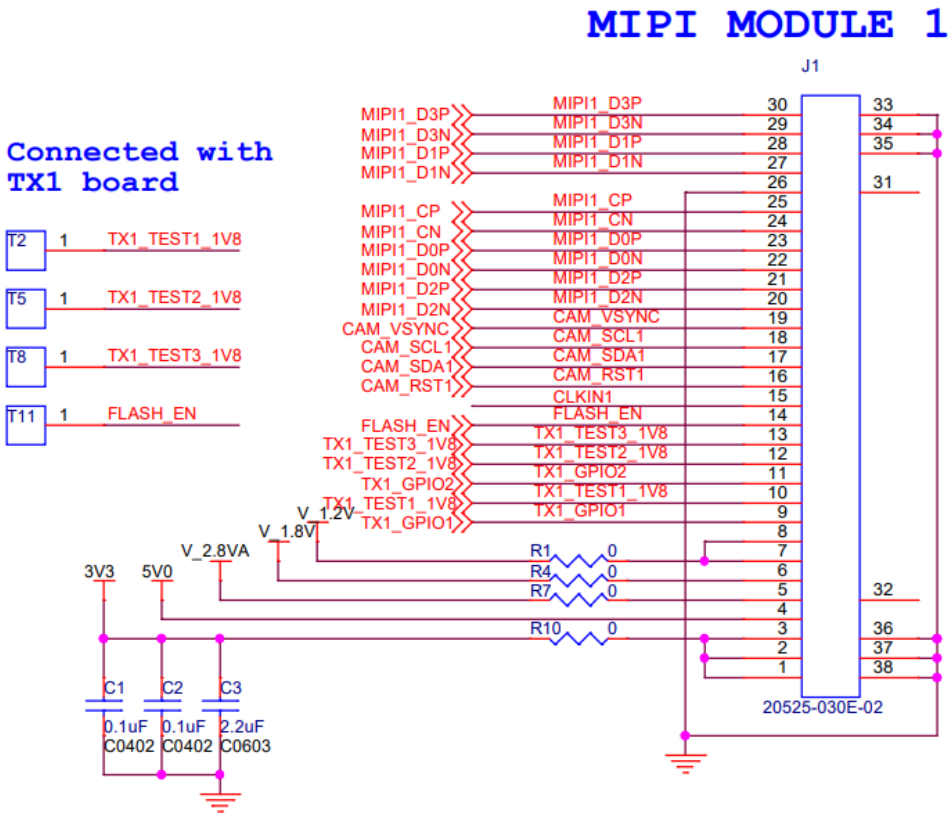

LI-JTX1-MIPI-ADPT

INTERFACES

Interface J2

- Part#: 20525-030E-02
- Number of Positions: 30
- Pitch: 0.4 mm
- Mating I-PEX Cable: FAW-1233-03 (300 mm)

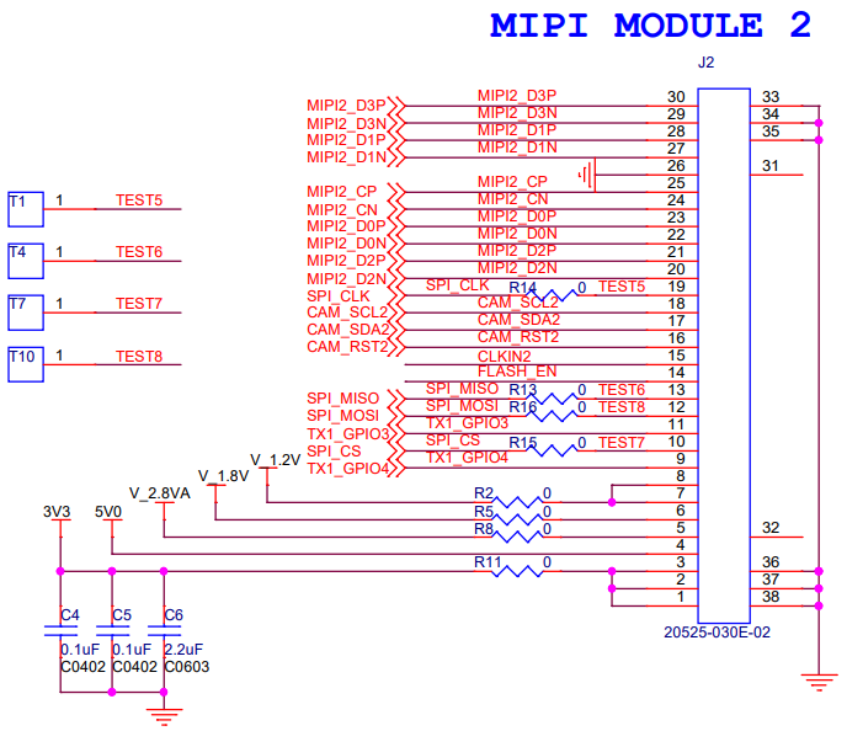

Interface J3

- Part#: 20525-030E-02
- Number of Positions: 30
- Pitch: 0.4 mm
- Mating I-PEX Cable: FAW-1233-03 (300 mm)

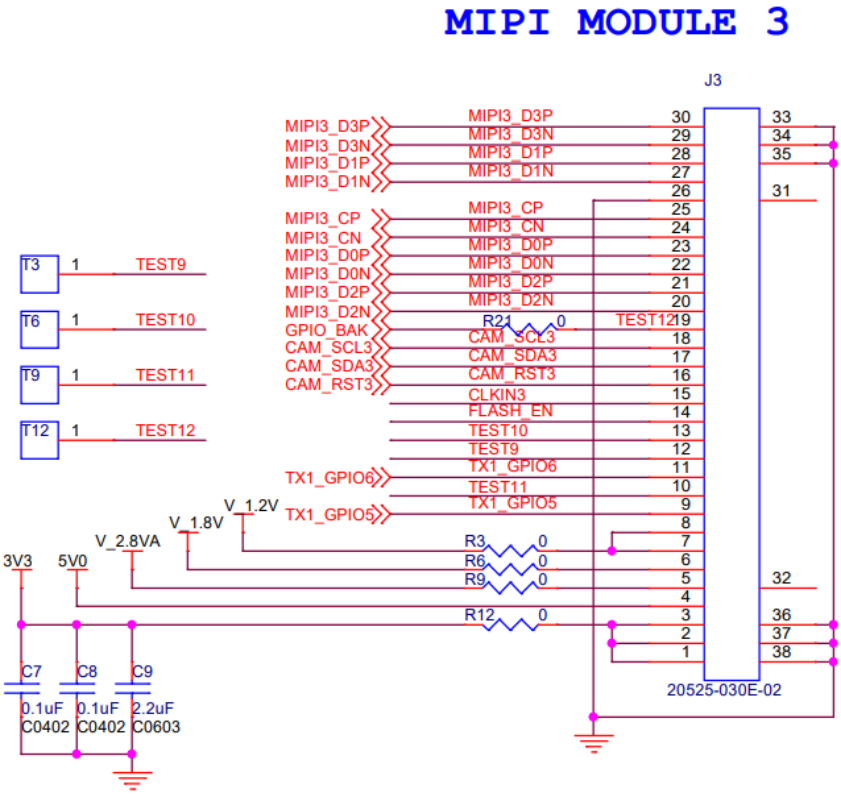

LI-JTX1-MIPI-ADPT

INTERFACES

Interface J10

- Part#: QTH-060-01-L-D-A
- Number of Positions: 120
- Pitch: 0.5 mm
- Number of Rows: 2

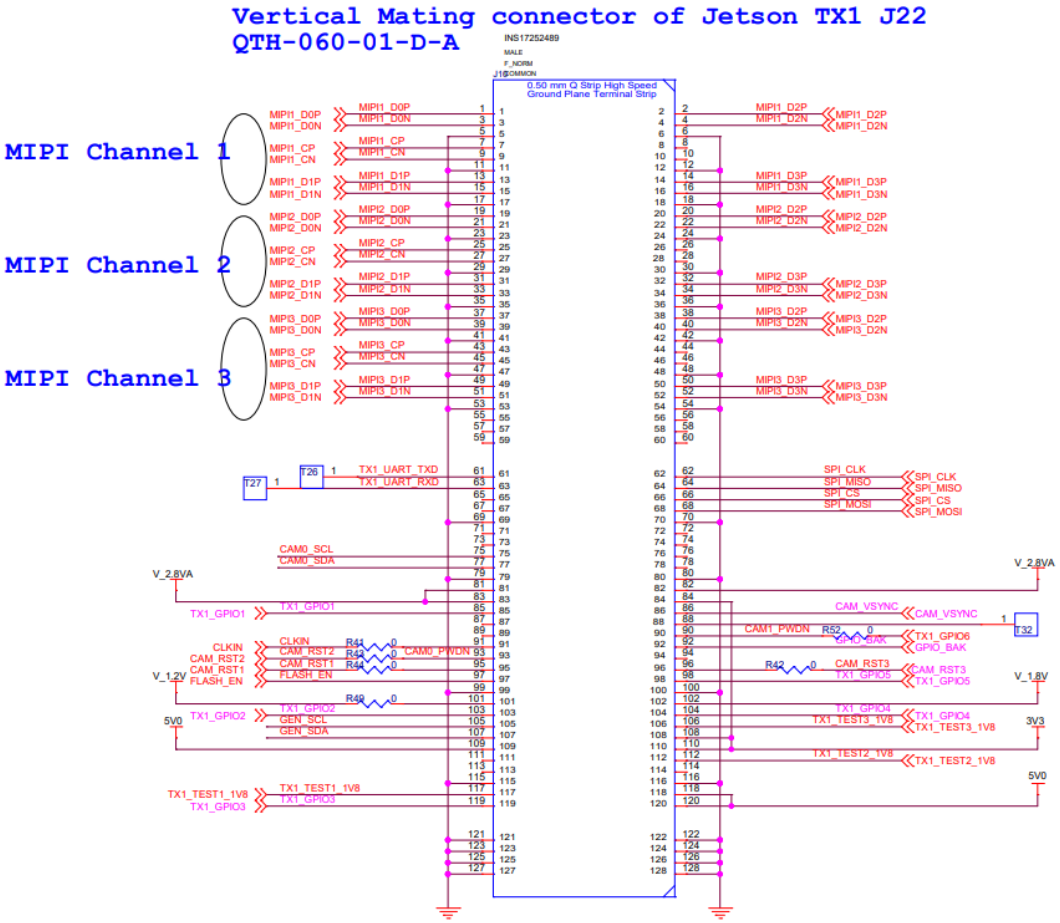

LI-JTX1-MIPI-ADPT

DIMENSIONS

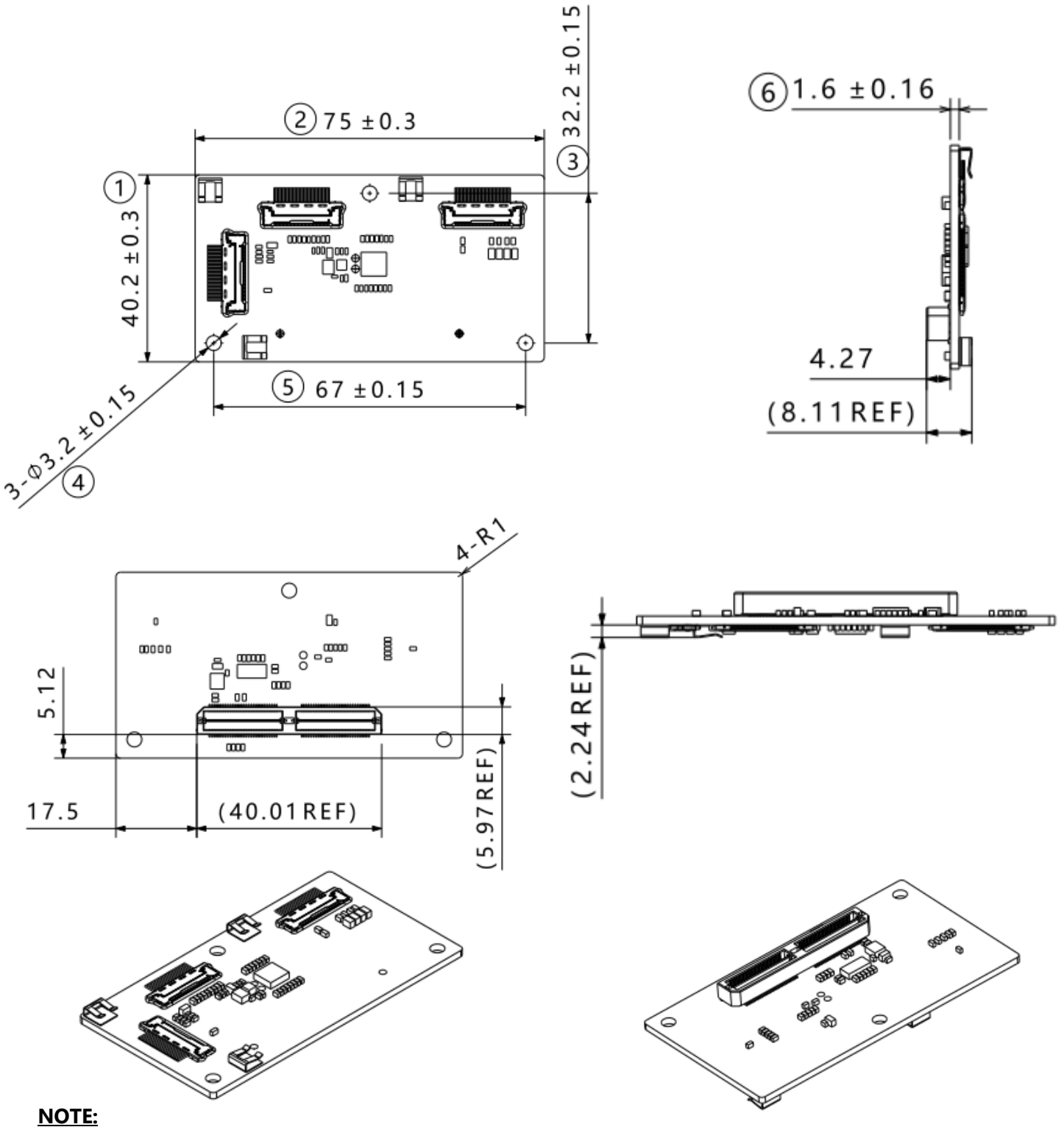

NOTE:

- ⊗ marked are important sizes.
- Tolerances for others unmarked are ± 0.3 mm.

Unit: mm

LI-JTX1-MIPI-ADPT-6CAM

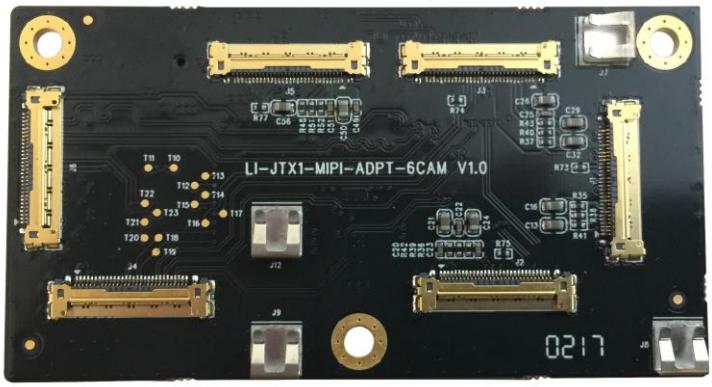

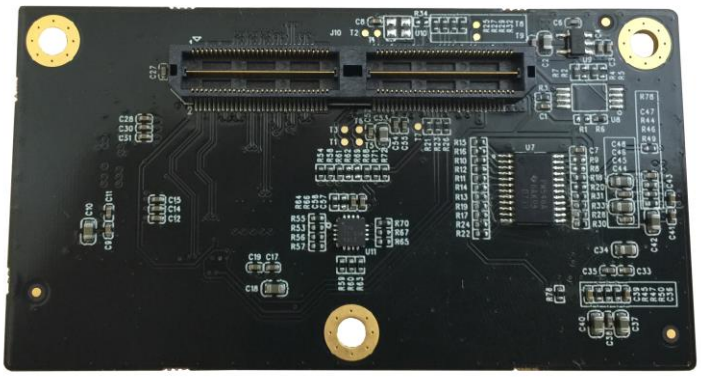

INTERFACES

Interface J1

- Part#: 20525-030E-02
- Number of Positions: 30
- Pitch: 0.4 mm
- Mating I-PEX cable: FAW-1233-03 (300 mm)

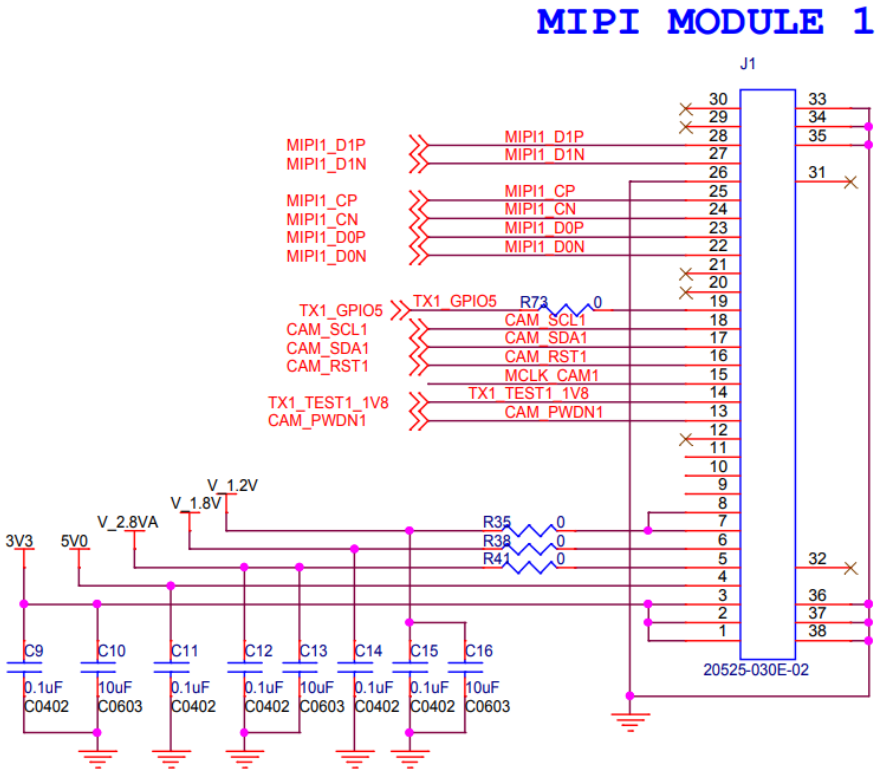

LI-JTX1-MIPI-ADPT-6CAM

INTERFACES

Interface J2

- Part#: 20525-030E-02
- Number of Positions: 30
- Pitch: 0.4 mm
- Mating I-PEX Cable: FAW-1233-03 (300 mm)

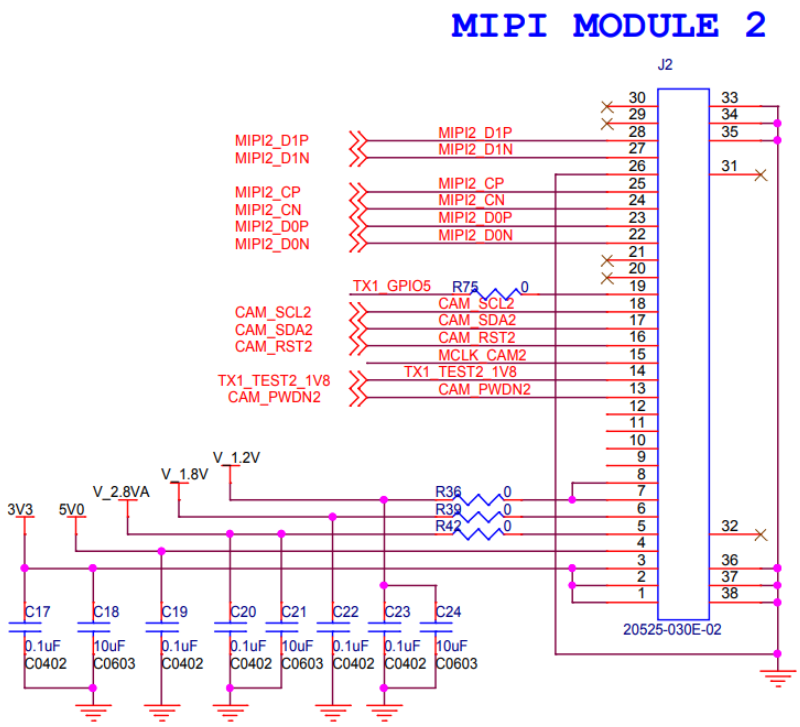

Interface J3

- Part#: 20525-030E-02
- Number of Positions: 30
- Pitch: 0.4 mm
- Mating I-PEX Cable: FAW-1233-03 (300 mm)

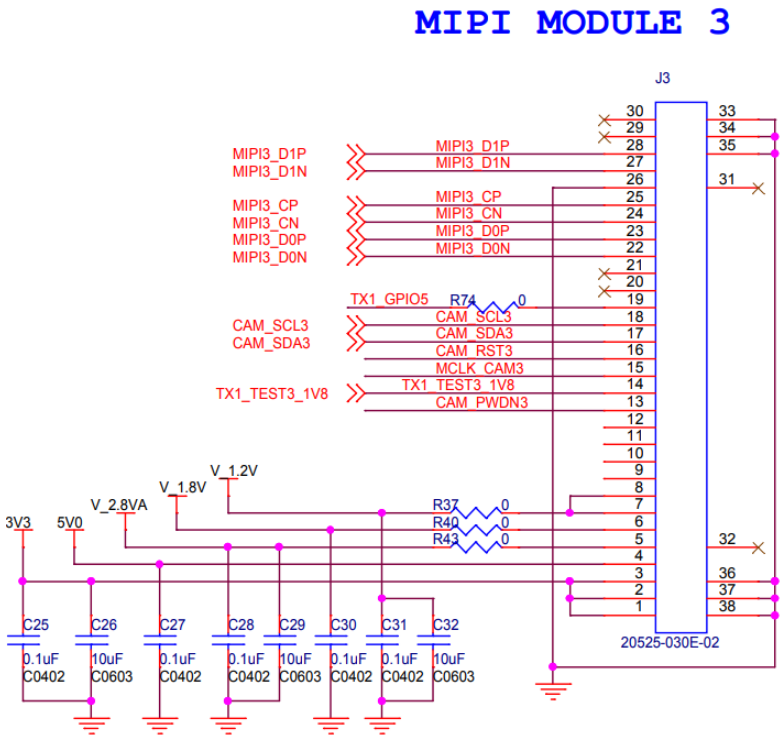

LI-JTX1-MIPI-ADPT-6CAM

INTERFACES

Interface J4

- Part#: 20525-030E-02
- Number of Positions: 30
- Pitch: 0.4 mm
- Mating I-PEX Cable: FAW-1233-03 (300 mm)

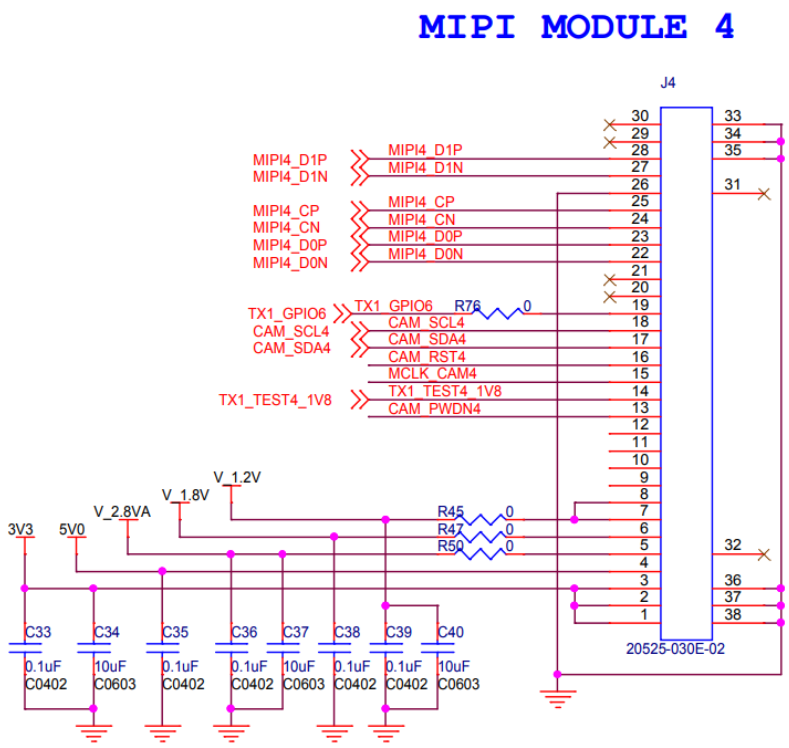

Interface J5

- Part#: 20525-030E-02
- Number of Positions: 30
- Pitch: 0.4 mm
- Mating I-PEX Cable: FAW-1233-03 (300 mm)

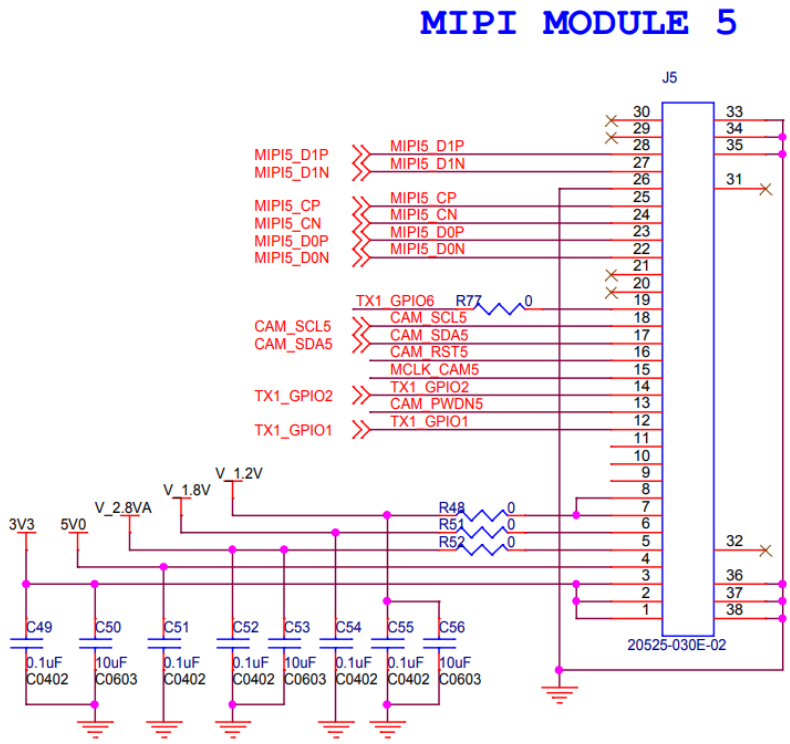

LI-JTX1-MIPI-ADPT-6CAM

INTERFACES

Interface J6

- Part#: 20525-030E-02
- Number of Positions: 30
- Pitch: 0.4 mm
- Mating I-PEX Cable: FAW-1233-03 (300 mm)

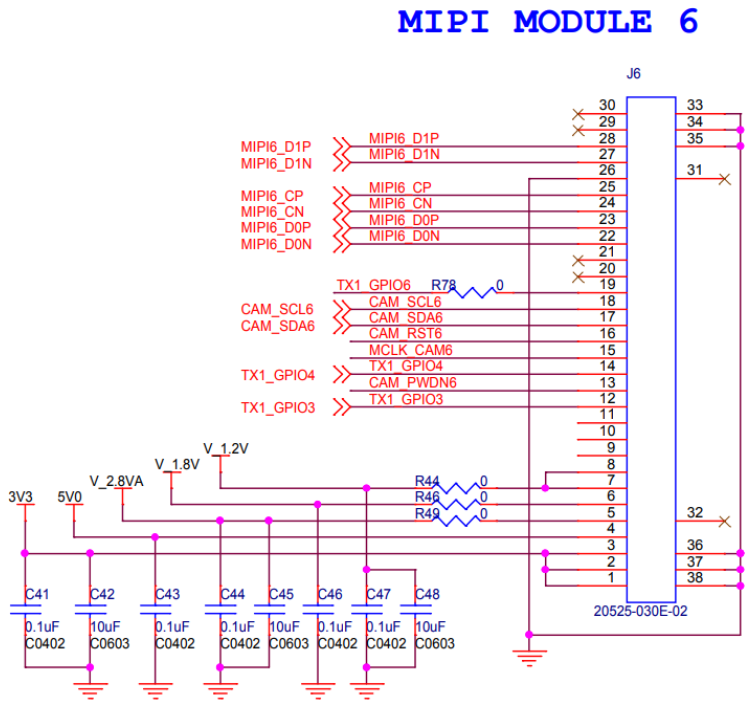

Interface J10

- Part#: QTH-060-01-L-D-A
- Number of Positions: 120
- Pitch: 0.5 mm
- Number of Rows: 2

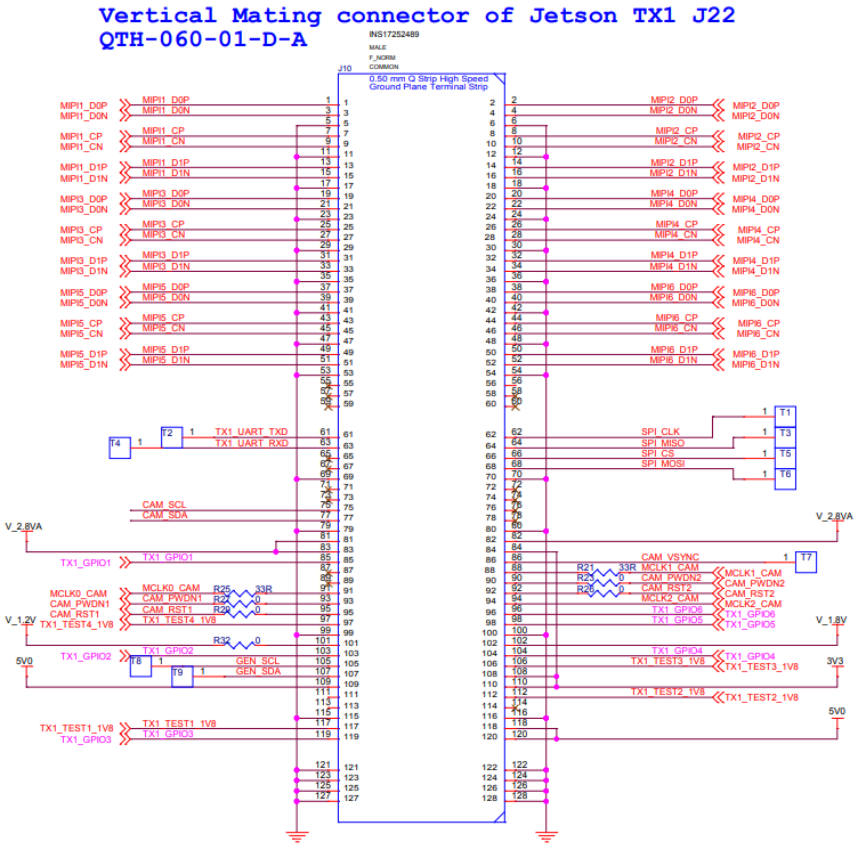

LI-JTX1-MIPI-ADPT-6CAM

DIMENSIONS

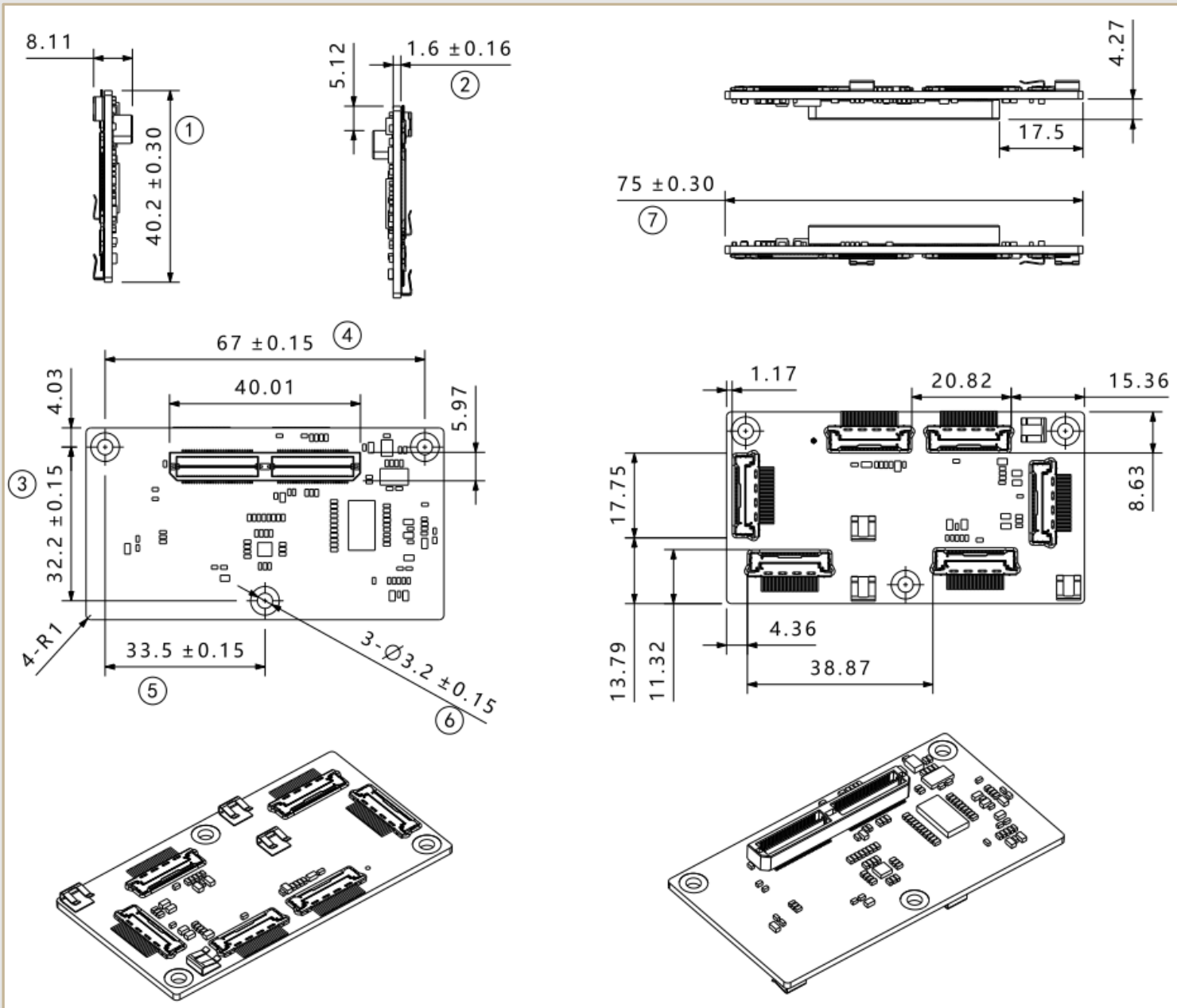

NOTE:

- Tolerances for others unmarked are ± 0.3 mm
- ⊗ marked are important sizes.

Unit: mm

FAW-1233-03 Cable

MECHANICAL DIAGRAM

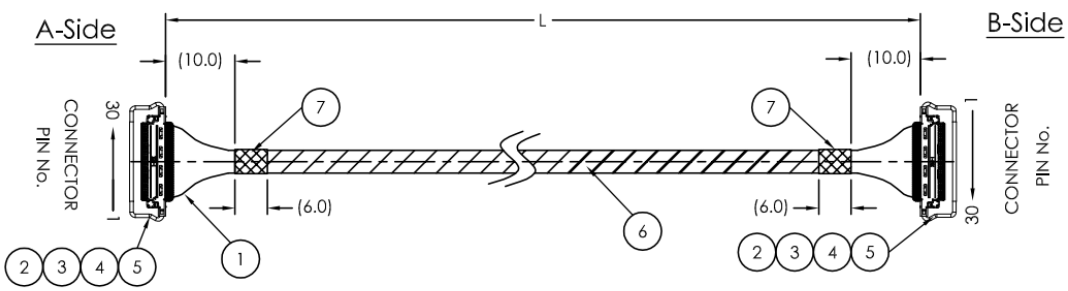

Fig. 1 Applying UV resin

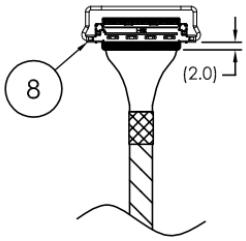

WIRING

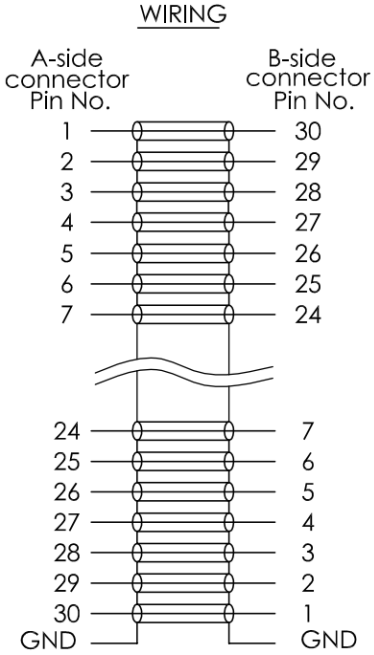

NOTE:

- Total length: 300.0 ± 10.0.
- Apply UV resin at the end of connector to cover cables both sides of the cable assembly (Fig.1).

Unit: mm

LI-IMX577-MIPI-M12

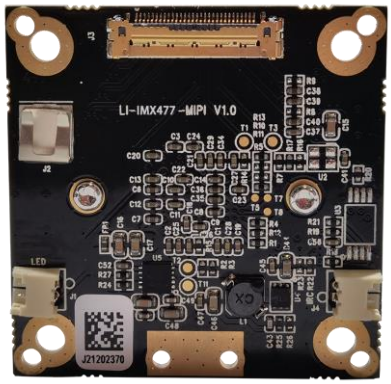

CAMERA SPECIFICATIONS

Sensor	Diagonal 7.857 mm (Type 1/2.3) 12.3MP CMOS Image Sensor IMX577
Optical Format	1/2.3"
Resolution	4056 (H) x 3040 (V) (active pixels)
Pixel Size	1.55 x 1.55 µm
Output Format	8-bit / 10-bit / 12-bit RAW data
Maximum Frame Rate	60 fps @ 4056 x 3040
ISP	Not included
Color / Mono	Color sensor
Interface	4-lane MIPI CSI-2
Power Consumption	199 mA @ 5 VDC (4056 x 3040 @ 12 fps)
Lens Mount	M12
Weight	~ 14 g
Part#	LI-IMX577-MIPI-M12

LI-IMX577-MIPI-M12

INTERFACES

Interface J3

- Connector Part#: 20525-030E-02
- Number of Positions: 30
- Pitch: 0.4 mm
- Mating I-PEX Cable: FAW-1233
- Sensor I2C Address: 0x10 (7-bit)
- Sensor input clock needs to be supplied from pin 16.
- External Power Supply: 3.3V, 5.0V
- 2.8V, 1.8V, 1.05V are generated from board.
- 5.0V is not used since it's for IR cut switch function only.

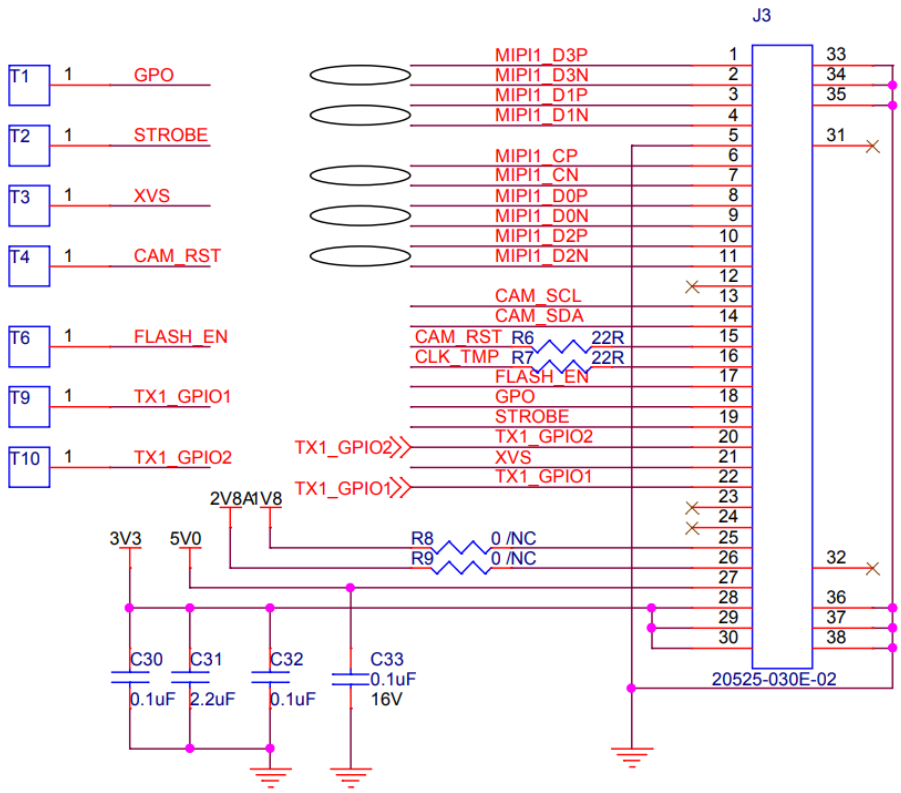

Interface J4

- Connector Part#: 1734829-2
- Number of Positions: 2
- Pitch: 1.25 mm

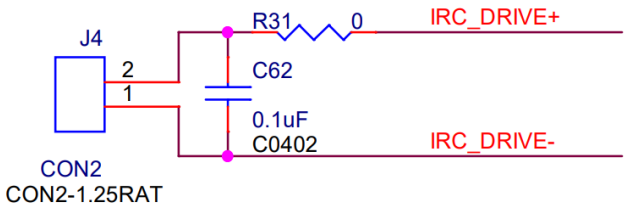

Interface J1

- Connector Part#: 1734829-2
- Number of Positions: 2
- Pitch: 1.25 mm

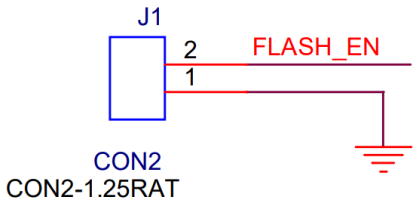

LI-IMX577-MIPI-M12

DIMENSIONS

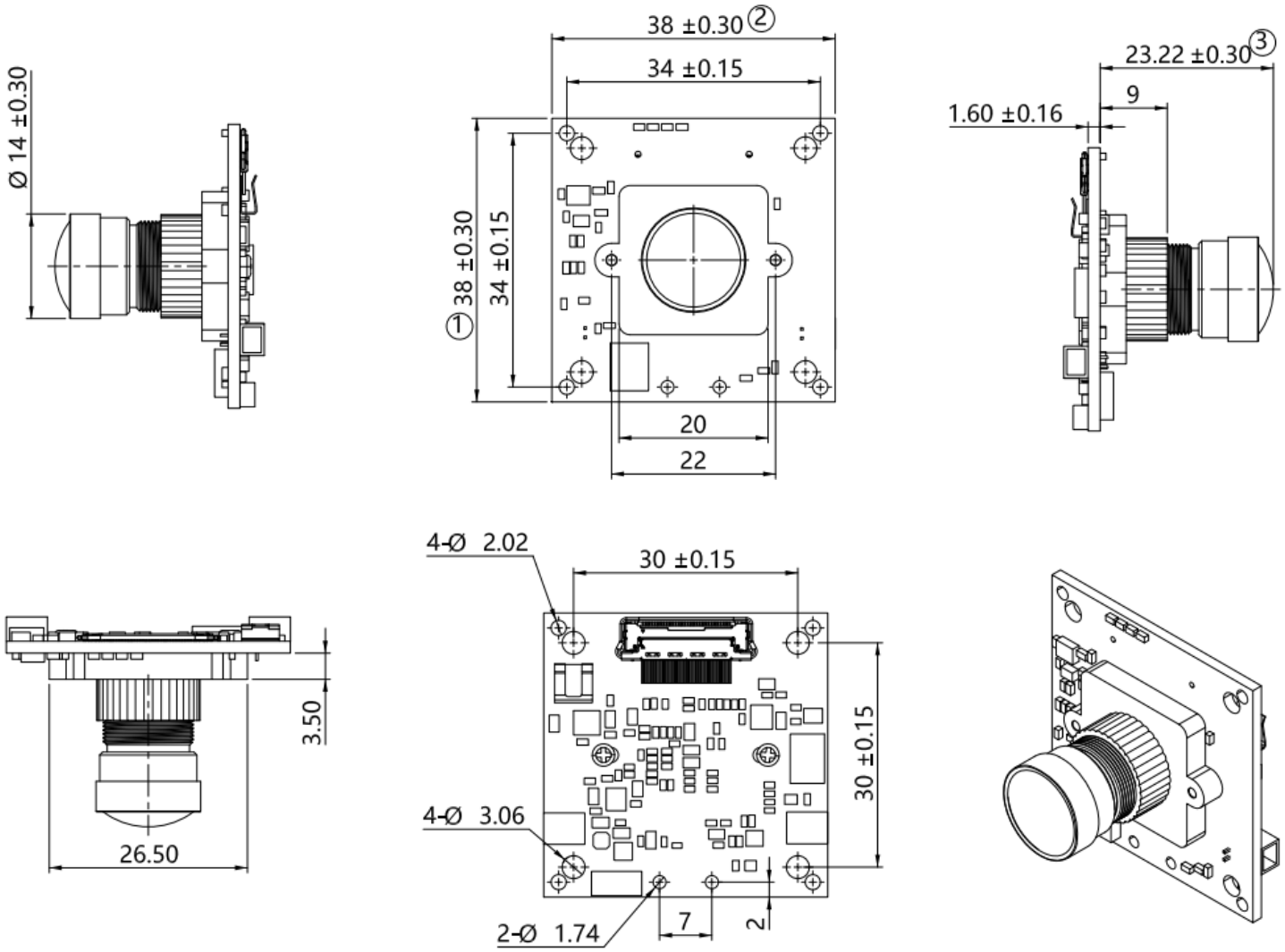

NOTE:

- ⊗ marked are important sizes.
- Tolerances for the unmarked are ± 0.3 mm.

Unit: mm

REVISION HISTORY

Revision	Description	Release Date
1.0	First release.	01 Jan 2020
1.1	Deleted info quoted from sensor spec.	24 May 2022
1.2	Replaced lens SYD1201A with lens JSD2733-A1 and updated related 2D dimensions.	18 Aug 2022

910 Auburn Ct, Fremont, CA 94538, USA
Phone: +1-408-263-0988
Fax: +1-408-217-1960
Email: sales@leopardimaging.com
Website: www.leopardimaging.com