LEOPARD IMAGING

Rev 1.2

LI-JETSON-KIT-IMX327M12-X Data Sheet

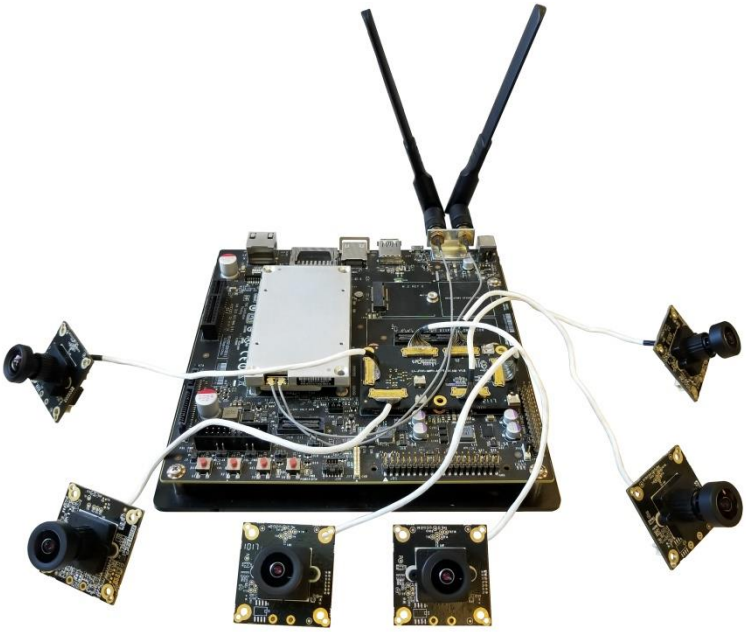

Key Features

- Compatible with Nvidia Jetson TX1/TX2 Developer Kit
- MIPI CSI-2 interface
- Supports up to six cameras
- Two adapter board options
  - LI-JTX1-MIPI-ADPT
    Includes three 4-lane interfaces
  - LI-JTX1-MIPI-ADPT-6CAM
    Includes six 2-lane interfaces
- Sony Diagonal 6.46 mm (Type 1/2.8) 2MP CMOS Image Sensor IMX327
- Active pixels: 1937 (H) x 1097 (V)
- Pixel size: 2.9 x 2.9 µm
- Color camera
- Length of the I-PEX cable: 300 mm
- Supports multiple length cables
- Connector Part#: 20525-030E-02
- Supports M12 x P0.5 lens
- Allows customization
- Part#:

(1 cam) LI-JETSON-KIT-IMX327M12
(2 cam) LI-JETSON-KIT-IMX327M12-D
(3 cam) LI-JETSON-KIT-IMX327M12-T
(6 cam) LI-JETSON-KIT-IMX327M12-H

Lens Spec

- Focal Length: 3.7 mm
- Aperture, F/#: 2.8 +/- 5%
- Built in 650 nm IR cut filter
- FOV (D / H / V): 86.5° / 78° / 49.5°
- TV Distortion: -1.0 %

BOM

Nvidia TX1/TX2 Developer Kit not included

#	Items	QTY
1	LI-JTX1-MIPI-ADPT or LI-JTX1-MIPI-ADPT-6CAM	1
2	LI-IMX327-MIPI-M12	1,2,3 or 6
3	FAW-1233-03 cable	1,2,3 or 6

Leopard Imaging Inc.

910 Auburn Ct, Fremont, CA 94538, USA
Phone: +1-408-263-0988
Fax: +1-408-217-1960
Email:sales@leopardimaging.com
Website: www.leopardimaging.com

LI-JETSON-KIT-IMX327M12

BOM

#	Items	QTY
1	LI-JTX1-MIPI-ADPT	1
2	LI-IMX327-MIPI-M12	1
3	FAW-1233-03 cable	1

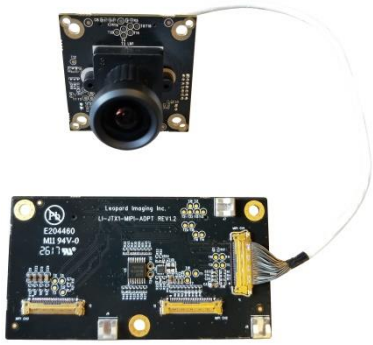

LI-JETSON-KIT-IMX327M12-D

BOM

#	Items	QTY
1	LI-JTX1-MIPI-ADPT	1
2	LI-IMX327-MIPI-M12	2
3	FAW-1233-03 cable	2

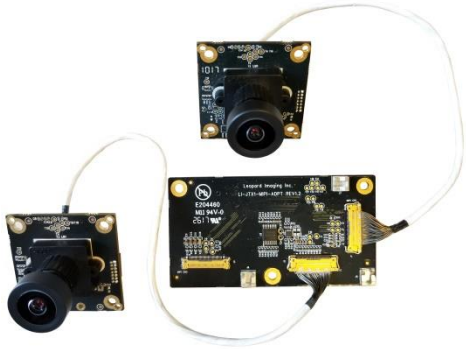

LI-JETSON-KIT-IMX327M12-T

BOM

#	Items	QTY
1	LI-JTX1-MIPI-ADPT	1
2	LI-IMX327-MIPI-M12	3
3	FAW-1233-03 cable	3

LI-JETSON-KIT-IMX327M12-H

BOM

#	Items	QTY
1	LI-JTX1-MIPI-ADPT-6CAM	1
2	LI-IMX327-MIPI-M12	6
3	FAW-1233-03 cable	6

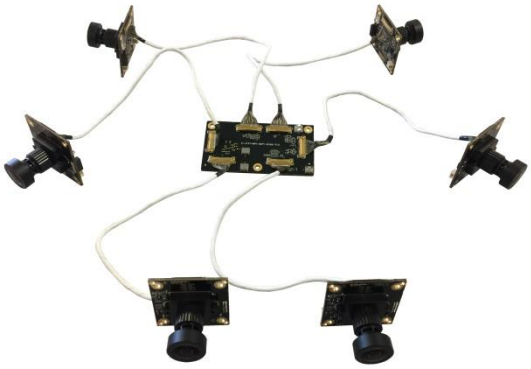

Leopard Imaging Inc.

910 Auburn Ct, Fremont, CA 94538, USA
Phone: +1-408-263-0988
Fax: +1-408-217-1960
Email:sales@leopardimaging.com
Website: www.leopardimaging.com

Dimensions

LI-IMX327-MIPI-M12

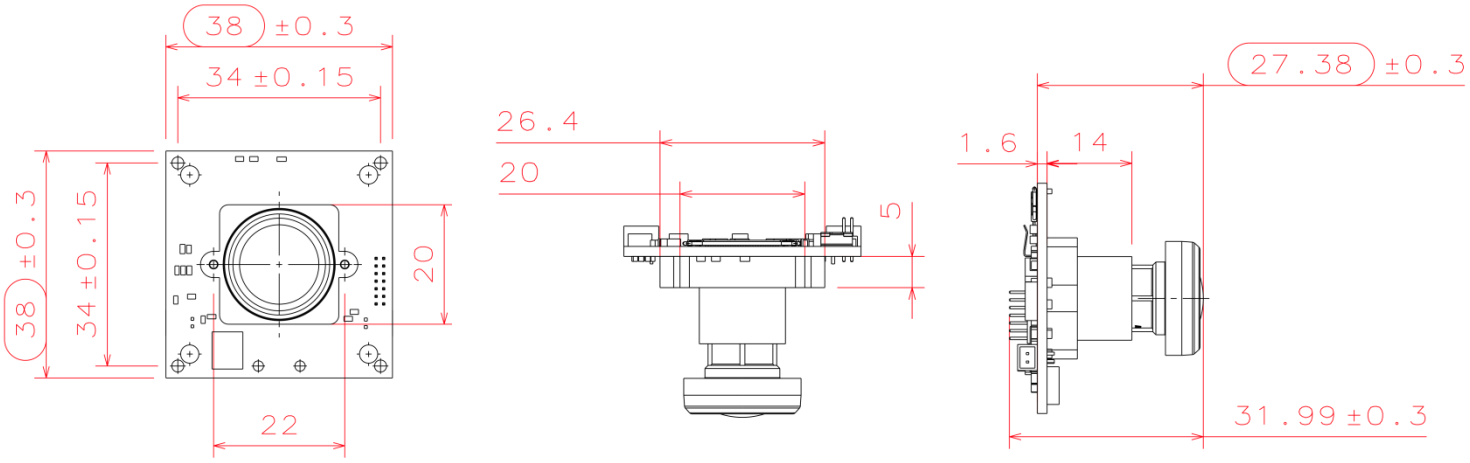

LI-JTX1-MIPI-ADPT

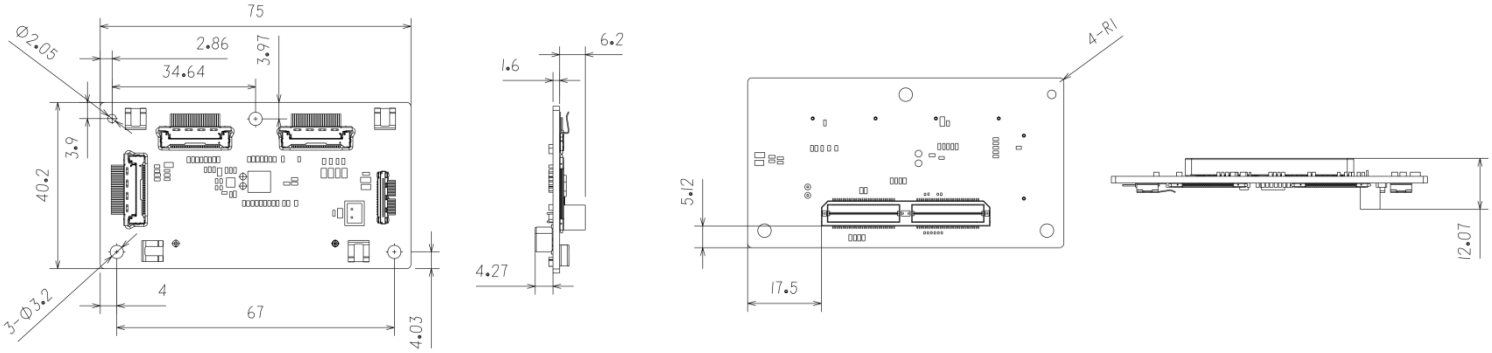

LI-JTX1-MIPI-ADPT-6CAM

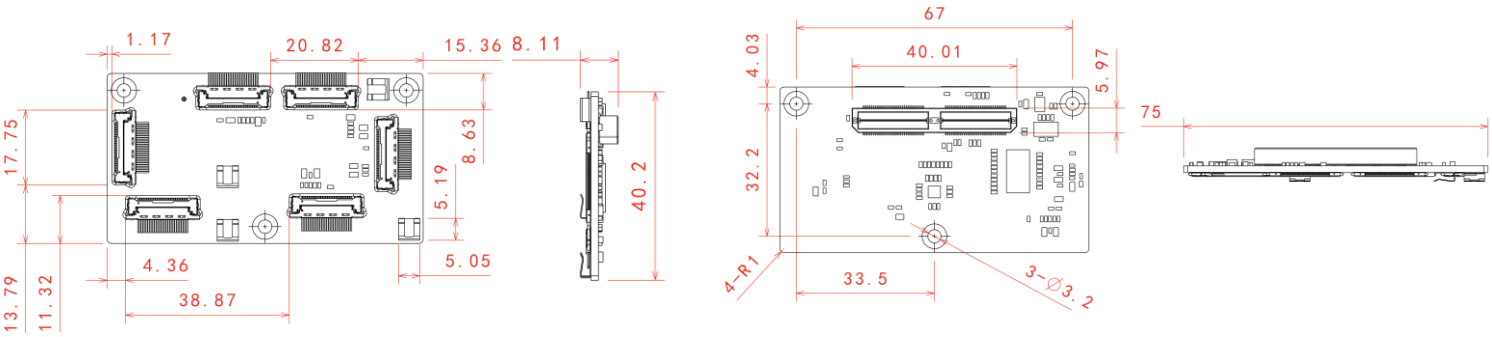

FAW-1233-03

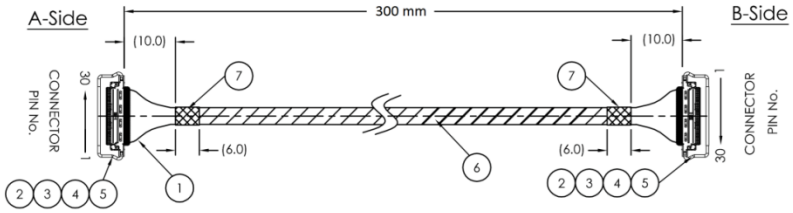

Leopard Imaging Inc.

910 Auburn Ct, Fremont, CA 94538, USA
Phone: +1-408-263-0988
Fax: +1-408-217-1960
Email:sales@leopardimaging.com
Website: www.leopardimaging.com

LI-JTX1-MIPI-ADPT

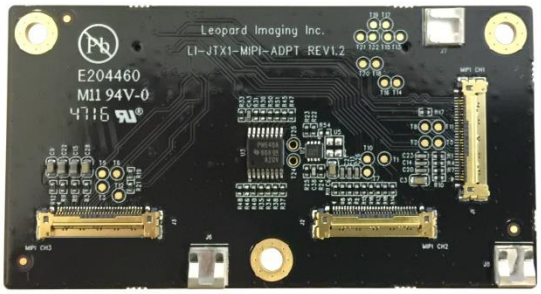

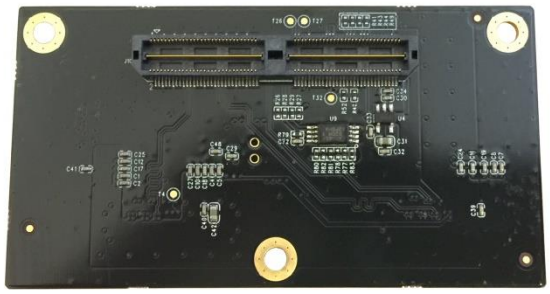

Interfaces

Interface J1

- Part#: 20525-030E-02
- Number of Positions: 30
- Pitch: 0.4 mm
- Mating I-PEX cable: FAW-1233-03 (300 mm)

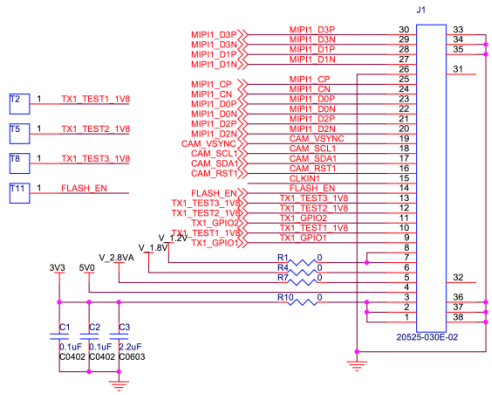

Interface J2

- Part#: 20525-030E-02
- Number of Positions: 30
- Pitch: 0.4 mm
- Mating I-PEX cable: FAW-1233-03 (300 mm)

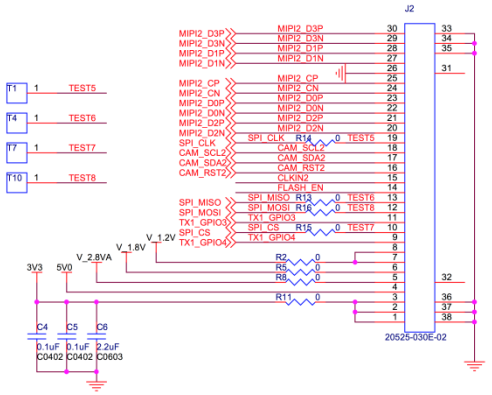

Interface J3

- Part#: 20525-030E-02
- Number of Positions: 30
- Pitch: 0.4 mm
- Mating I-PEX cable: FAW-1233-03 (300 mm)

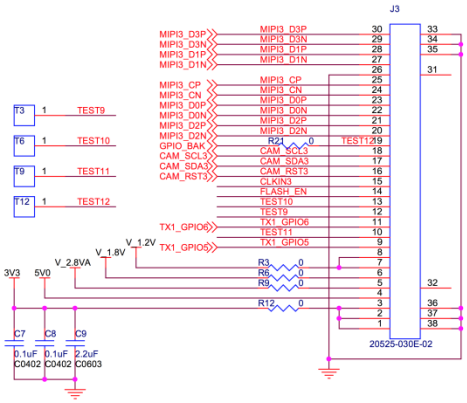

Leopard Imaging Inc.

910 Auburn Ct, Fremont, CA 94538, USA
Phone: +1-408-263-0988
Fax: +1-408-217-1960
Email:sales@leopardimaging.com
Website: www.leopardimaging.com

Interface J10

- Part#: QTH-060-01-L-D-A
- Number of Positions: 120
- Number of Rows: 2
- Pitch: 0.5 mm

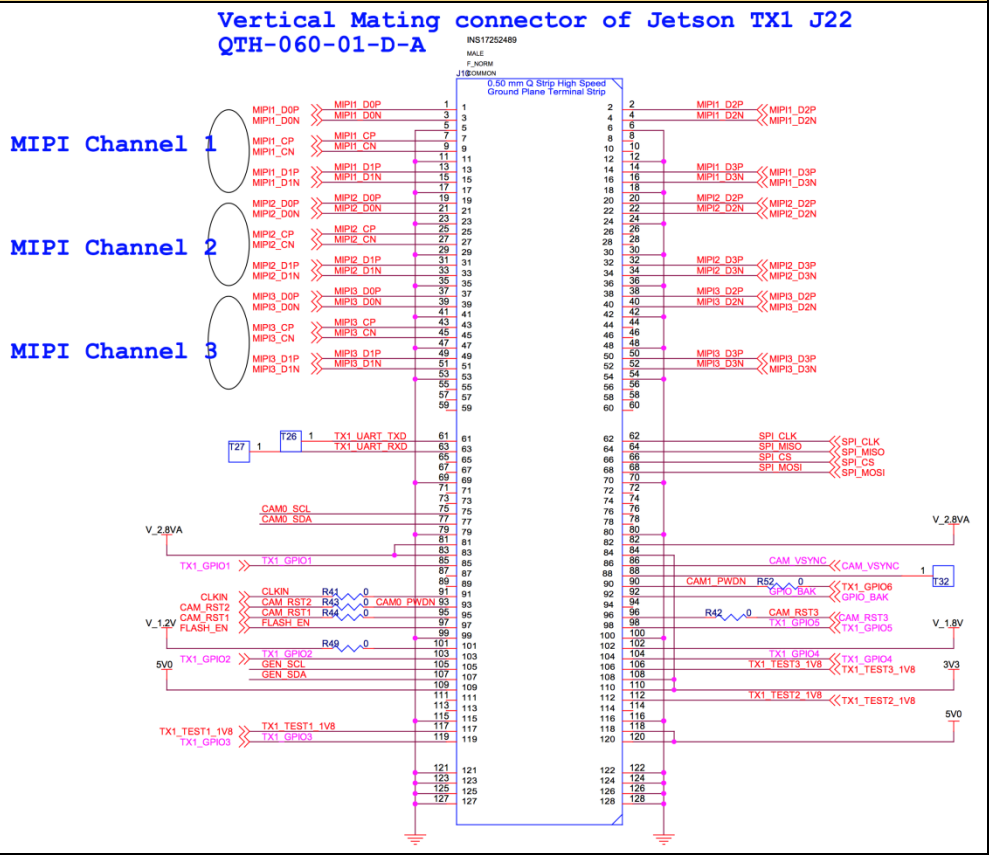

Leopard Imaging Inc.

910 Auburn Ct, Fremont, CA 94538, USA
Phone: +1-408-263-0988
Fax: +1-408-217-1960
Email:sales@leopardimaging.com
Website: www.leopardimaging.com

LI-JTX1-MIPI-ADPT-6CAM

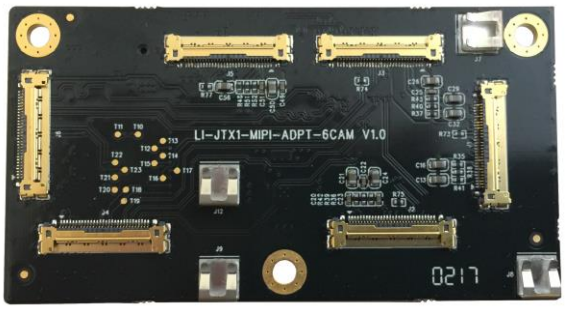

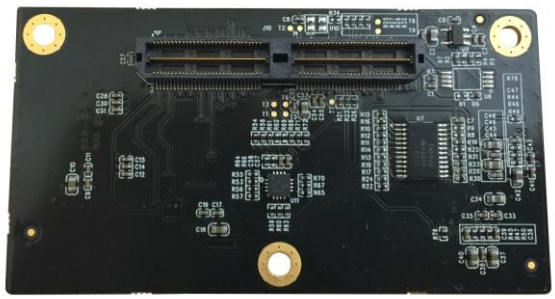

Interfaces

Interface J1

- Part#: 20525-030E-02
- Number of Positions: 30
- Pitch: 0.4 mm
- Mating I-PEX cable: FAW-1233-03 (300 mm)

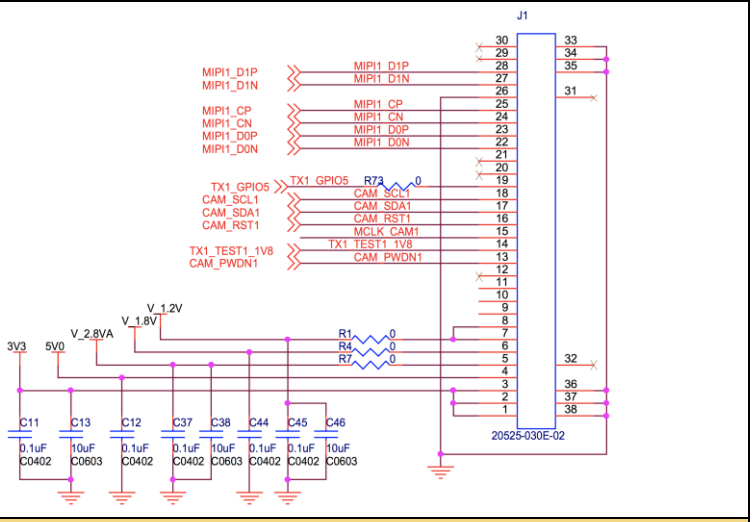

Interface J2

- Part#: 20525-030E-02
- Number of Positions: 30
- Pitch: 0.4 mm
- Mating I-PEX cable: FAW-1233-03 (300 mm)

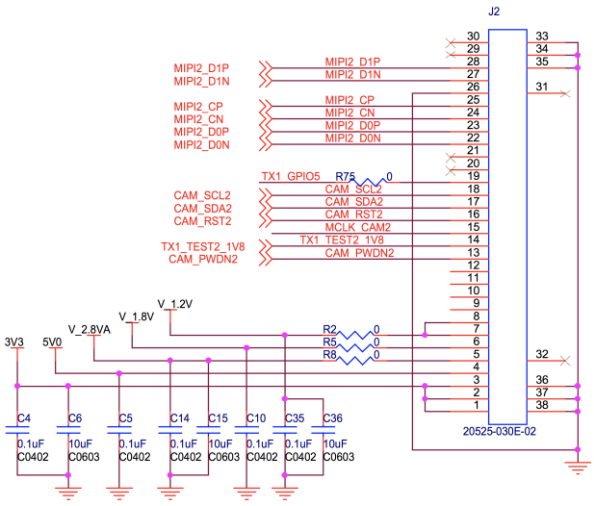

Leopard Imaging Inc.

910 Auburn Ct, Fremont, CA 94538, USA
Phone: +1-408-263-0988
Fax: +1-408-217-1960
Email:sales@leopardimaging.com
Website: www.leopardimaging.com

Interface J3

- Part#: 20525-030E-02
- Number of Positions: 30
- Pitch: 0.4 mm
- Mating I-PEX cable: FAW-1233-03 (300 mm)

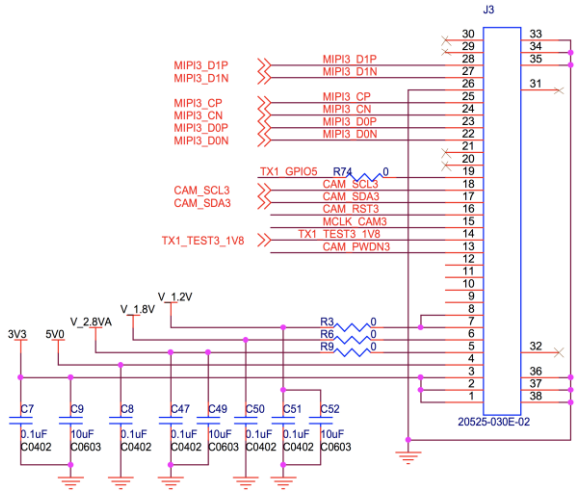

Interface J4

- Part#: 20525-030E-02
- Number of Positions: 30
- Pitch: 0.4 mm
- Mating I-PEX cable: FAW-1233-03 (300 mm)

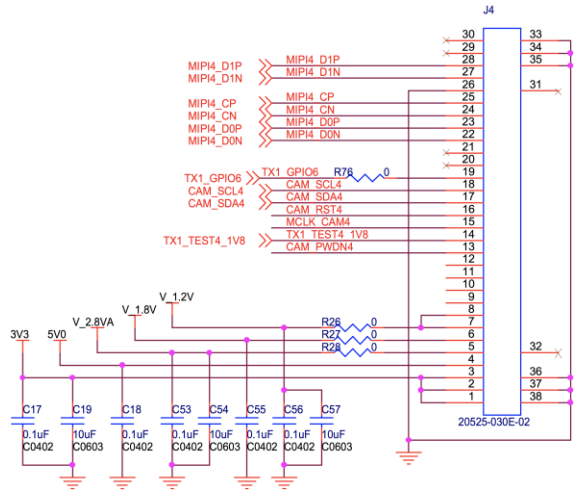

Interface J5

- Part#: 20525-030E-02
- Number of Positions: 30
- Pitch: 0.4 mm
  Mating I-PEX cable: FAW-1233-03 (300 mm)

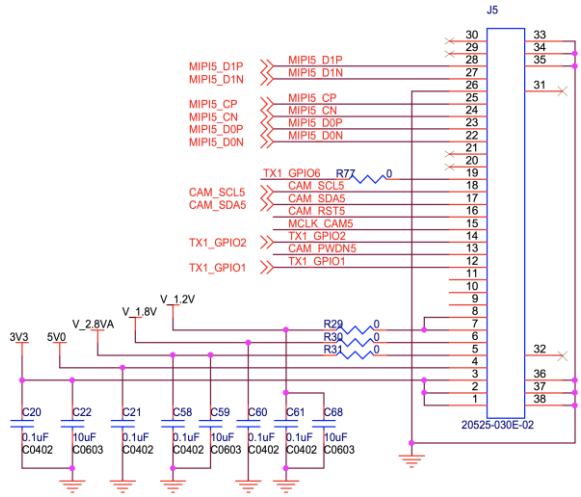

Leopard Imaging Inc.

910 Auburn Ct, Fremont, CA 94538, USA
Phone: +1-408-263-0988
Fax: +1-408-217-1960
Email:sales@leopardimaging.com
Website: www.leopardimaging.com

Interface J9

- Part#: 20525-030E-02
- Number of Positions: 30
- Pitch: 0.4 mm
  Mating I-PEX cable: FAW-1233-03 (300 mm)

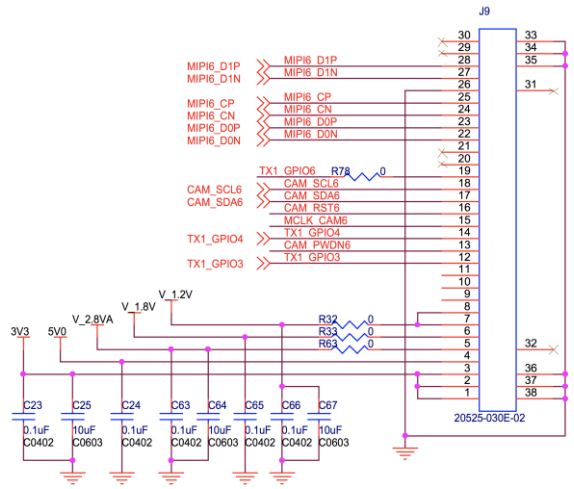

Interface J10

- Part#: QTH-060-01-L-D-A
- Number of Positions: 120
- Number of Rows: 2
- Pitch: 0.5 mm

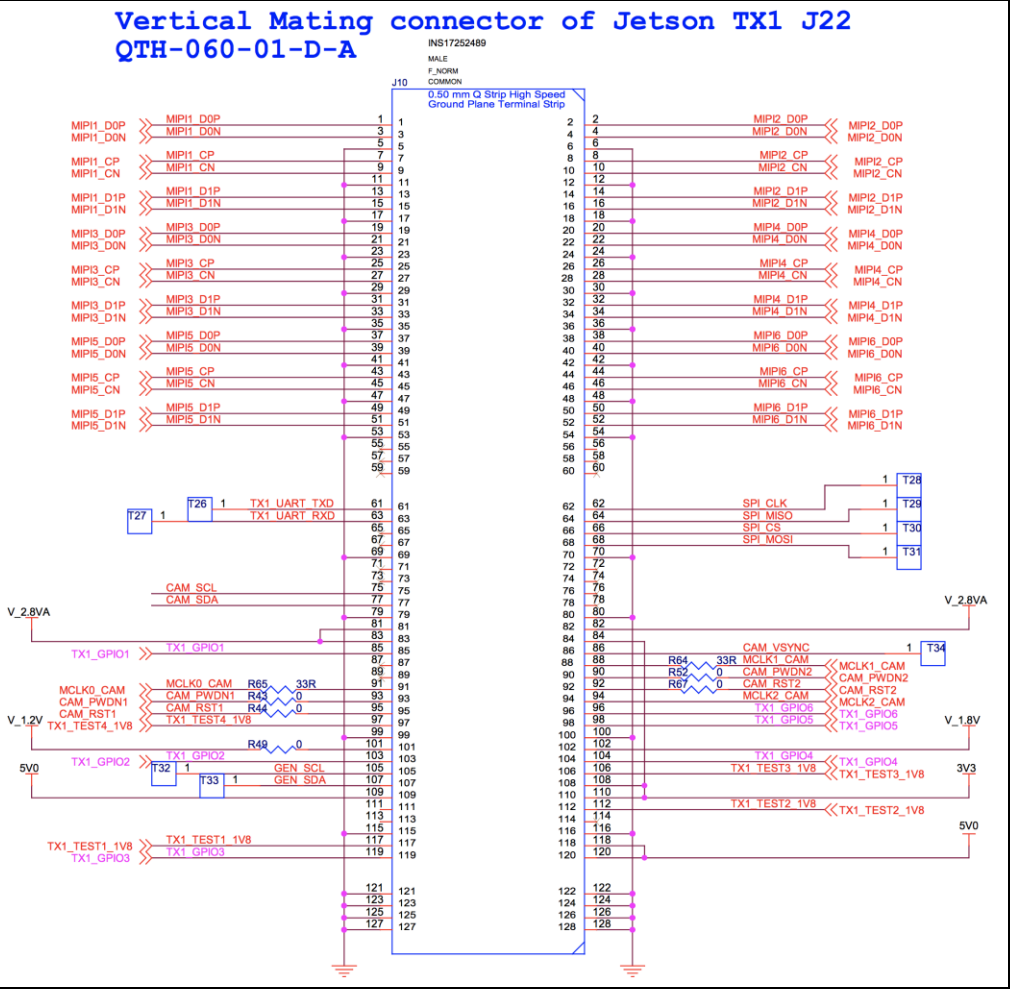

Leopard Imaging Inc.

910 Auburn Ct, Fremont, CA 94538, USA
Phone: +1-408-263-0988
Fax: +1-408-217-1960
Email:sales@leopardimaging.com
Website: www.leopardimaging.com

LI-IMX327-MIPI-M12

Camera Spec	
Image sensor	Sony Diagonal 6.46 mm (Type 1/2.8) 2MP CMOS Image Sensor IMX327
Optical format	1/2.8"
Number of active pixels	1937 (H) x 1097 (V)
Pixel size	2.9 x 2.9 µm
Color or Mono	Color
Interface	MIPI interface
Lens mount	M12
Weight	~ 14 g
Interfaces	
Interface J2: ▪ Part#: 20525-030E-02 ▪ Number of Positions: 30 ▪ Pitch: 0.4 mm ▪ Mating I-PEX cable: FAW-1233-03 (300 mm)	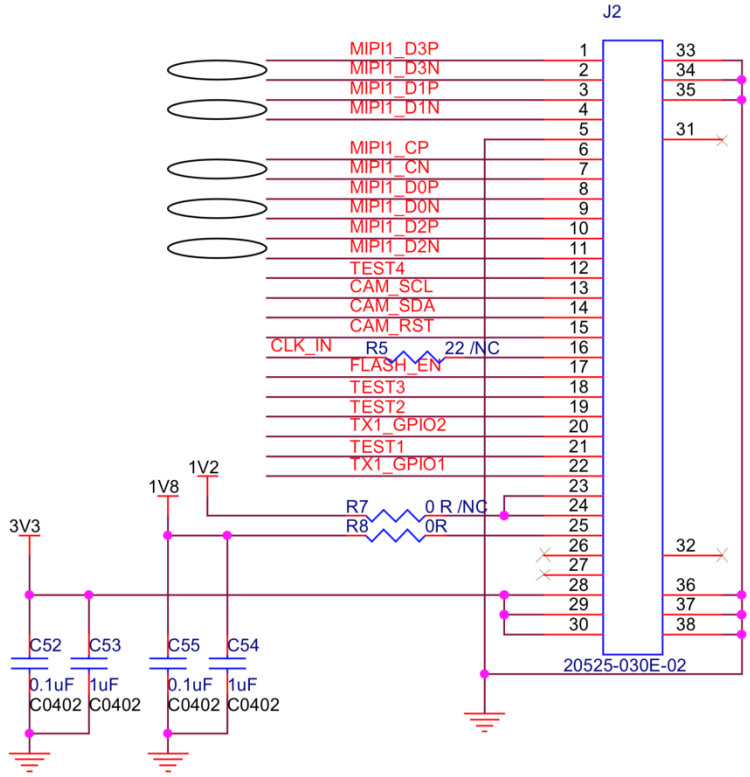

Leopard Imaging Inc.

910 Auburn Ct, Fremont, CA 94538, USA
Phone: +1-408-263-0988
Fax: +1-408-217-1960
Email:sales@leopardimaging.com
Website: www.leopardimaging.com

Revision History

Revision	Description	Release Date
1.0	First release.	19. Apr. 2018
1.1	Deleted info quoted from sensor spec.	24. May. 2022
1.2	Deleted lens model info.	03. Aug. 2023

910 Auburn Ct, Fremont, CA 94538, USA
Phone: +1-408-263-0988
Fax: +1-408-217-1960
Email:sales@leopardimaging.com
Website: www.leopardimaging.com