LI-IMX900-MIPI-078H

Address:
910 Auburn Ct
Fremont, CA 94538
USA

Phone:
+1 (408)263-0988
Fax:
+1 (408)217-1960

Sales:
sales@leopardimaging.com
Support:
support@leopardimaging.com

INTRODUCTION

The LI-IMX900-MIPI-078H is a MIPI CSI-2 camera equipped with Sony diagonal 5.81 mm (Type 1/3.1) Pregius CMOS image sensor IMX900 which features a global shutter, and achieves high sensitivity and low dark current. This camera outputs 8-bit / 10-bit / 12-bit RAW data.

SPECIFICATIONS

Sensor	Sony Diagonal 5.81 mm Pregius Sensor IMX900	
Optical Format	1/3.1"	
Shutter Type	Global shutter	
Resolution	2064 (H) x 1552 (V) (active pixels)	
Pixel Size	2.25 x 2.25 µm	
Output Format	8-bit / 10-bit / 12-bit RAW data	
Maximum Frame Rate	8-bit: 121 fps @ All-pixel scan mode 10-bit: 113.4 fps @ All-pixel scan mode 12-bit: 70.6 fps @ All-pixel scan mode	
ISP	Not included	
Color / Mono	Color / Mono sensor (**Default:** Mono)	
Interface	4-lane MIPI CSI-2	
Power Consumption	Mono	227 mA @ 5 VDC 2064 x 1552 @ 30 fps
	Color	TBD
Operating Temp	TBD	
Storage Temp	TBD	
Weight	~ 14 g	
Part#	LI-IMX900-MIPI-078H	

APPLICATIONS

- FA camera
- Code reading camera
- Embedded vision systems

LENS SPECIFICATIONS

Focal Length	3.6 mm
Aperture, F/#	2.0 ± 5%
Field of View (FOV)	78˚ horizontal
TV Distortion	-10 %
Relative Illumination	> 78 %
IR Filter	650 nm IR cut Filter
Lens Mount	M12 x P0.5

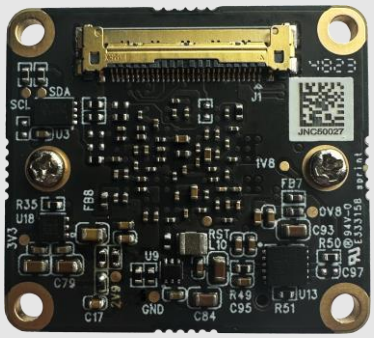

DIMENSIONS

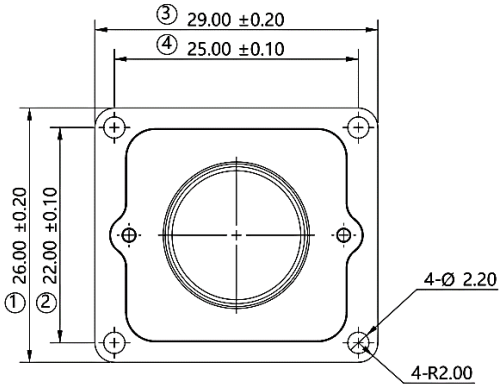

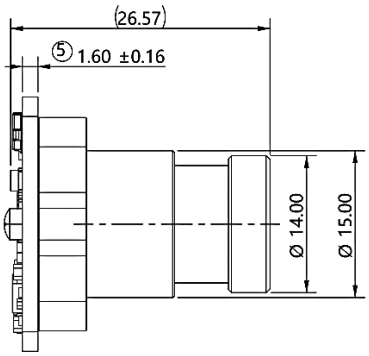

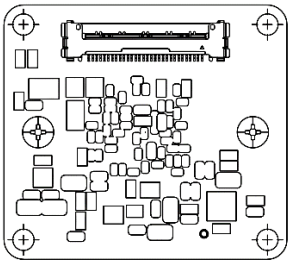

TOLERANCE TABLE					
LENGTH TOLERANCE		CHAMFER TOLERANCE		ANGLE TOLERANCE	
Size X	Tolerance	Size X	Tolerance	Size X	Tolerance
0.5 < X≤3	±0.1	0.5 < X≤3	±0.2	X≤10	±1°
3 < X≤6	±0.1	3 < X≤6	±0.5	10 < X≤50	±30'
6 < X≤30	±0.2	6 < X≤30	±1	50 < X≤120	±20'
30 < X≤120	±0.3	X > 30	±2	120 < X≤400	±10'
120 < X≤400	±0.5			X > 400	±5'
400 < X≤1000	±0.8				
X > 1000	±1.2				

NOTE:

- ⊗ marked are important sizes.
- Tolerances for the unmarked refer to the tolerance table.
- All materials are compliant with RoHS requirements.
- Unit: mm

INTERFACE J1

- Connector Part#: 20525-030E-02
- Number of Positions: 30
- Mating I-PEX Cable: FAW-1233-30P
- Sensor I2C Address: 0X36 (7-bit)
- External Power Supply: 5V0, 3.3V

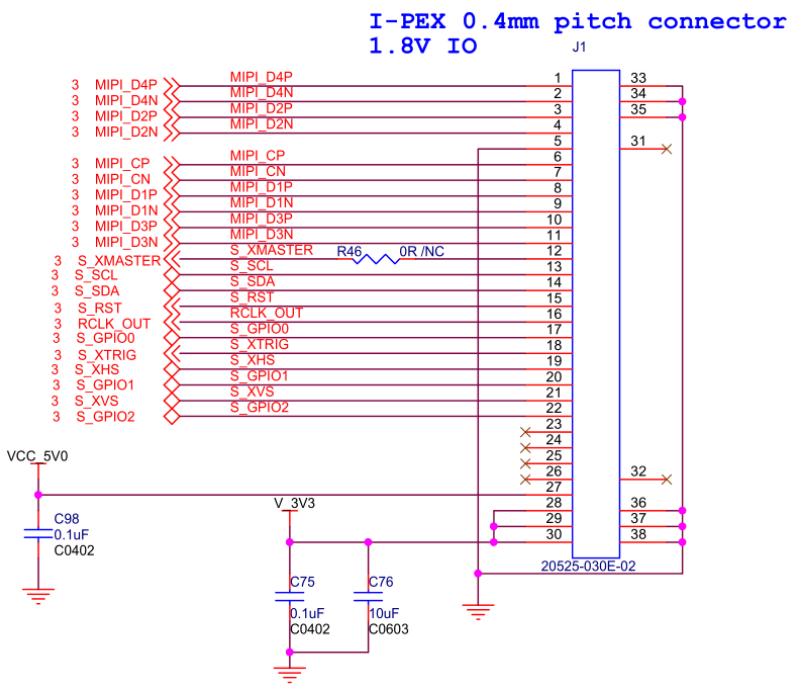

PINOUT DETAILS OF IPEX CONNECTOR (J1)

IPEX Pin No	Signal Name	Pin Type	Description
1	MIPI_D4P	OUTPUT	MIPI Data Lane 4 Differential Pair +
2	MIPI_D4N	OUTPUT	MIPI Data Lane 4 Differential Pair –
3	MIPI_D2P	OUTPUT	MIPI Data Lane 2 Differential Pair +
4	MIPI_D2N	OUTPUT	MIPI Data Lane 2 Differential Pair –
5	GND	GND	GND
6	MIPI_CP	OUTPUT	MIPI Clock Lane Differential Pair +
7	MIPI_CN	OUTPUT	MIPI Clock Lane Differential Pair –
8	MIPI_D1P	OUTPUT	MIPI Data Lane 1 Differential Pair +
9	MIPI_D1N	OUTPUT	MIPI Data Lane 1 Differential Pair –
10	MIPI_D3P	OUTPUT	MIPI Data Lane 3 Differential Pair +
11	MIPI_D3N	OUTPUT	MIPI Data Lane 3 Differential Pair –
12	S_XMASTER	INPUT	Master / Slave selection input(Reserved) Master mode in default on board
13	S_SCL	INPUT	1.8V IO I2C Clock Signal(Pulled-up to 1.8V using 1KΩ on board)
14	S_SDA	I/O	1.8V IO I2C Data Signal(Pulled-up to 1.8V using 1KΩ on board)
15	S_RST	INPUT	1.8V IO Camera Reset (Normal: High, Clear: Low) (Pulled-up to 1.8V using 10KΩ on board)
16	RCLK_OUT	INPUT	Master clock input(Reserved)
17	S_GPIO0	OUTPUT	1.8V IO Camera Digital output
18	S_XTRIG	INPUT	1.8V IO Camera Trigger signal
19	S_XHS	I/O	1.8V IO Camera Horizontal sync signal
20	S_GPIO1	OUTPUT	1.8V IO Camera Digital output
21	S_XVS	I/O	1.8V IO Camera Vertical sync signal
22	S_GPIO2	OUTPUT	1.8V IO Camera Digital output
23	RSVD	–	No Connection
24	RSVD	–	No Connection
25	RSVD	–	No Connection
26	RSVD	–	No Connection
27	5V0	POWER	5V0 Power supply for camera board
28	3V3	POWER	3V3 Power supply for camera board
29	3V3	POWER	3V3 Power supply for camera board
30	3V3	POWER	3V3 Power supply for camera board

REVISION HISTORY

Revision	Description	Release Date
0.1	Initial draft.	23 Feb 2024

910 Auburn Ct, Fremont, CA 94538, USA
Phone: +1-408-263-0988
Fax: +1-408-217-1960
Email: sales@leopardimaging.com
Website: www.leopardimaging.com