LI-NANO-CB-IMX274M12-X

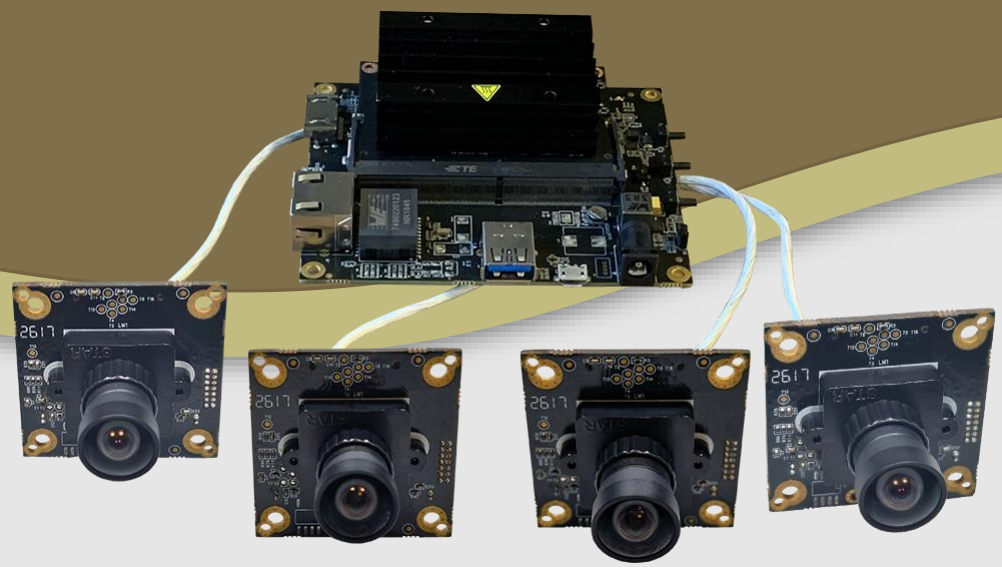

Address:

910 Auburn Ct
Fremont, CA 94538
USA

Phone:

+1 (408)263-0988

Fax:

+1 (408)217-1960

Sales:

sales@leopardimaging.com

Support:

support@leopardimaging.com

KEY FEATURES

- Compatible with Nvidia® Jetson NANO™
- MIPI CSI-2 interface
- Supports up to four cameras (2-lane mode)
- Sensor: Sony Diagonal 7.20 mm (Type 1/2.5) CMOS image sensor IMX274
- Active pixels: 3864 (H) x 2196 (V)
- Pixel size: 1.62 x 1.62 µm
- Color camera
- Supports 3840 x 2160 (4K) @ 30 fps and 1920 x 1080 @ 60 fps
- Supports PoE (options)
- I-PEX cable part#: FAW-1233-03
- Length of the I-PEX cable: 300 mm
- Supports multiple length cables
- MIPI connector part#: 20525-030E-02
- Supports M12 lens
- Provides driver binary and source code
- Allows customization
- Part#:

  LI-NANO-CB-IMX274M12-X

  LI-NANO-CB-POE-IMX274M12-X

LENS SPECIFICATIONS

Effective Focal Length	3.25 mm ± 5%
Aperture, F/#	2.60 ± 5%
Field of View (FOV)	87.9˚ horizontal
	96.1˚ diagonal
	56.2˚ vertical
TV Distortion	< -0.55%
Relative Illumination	> 66.15%
IR Filter	650 nm IR cut filter
Lens Mount	M12 x P0.5

BOM

#	Items	QTY
1	LI-NANO-CB or LI-NANO-CB-POE	1
2	Nvidia Jetson NANO SOM	1
3	LI-IMX274-MIPI-M12	1, 2, 3 or 4
4	FAW-1233-03 cable	1, 2, 3 or 4
5	DC 12V power supply	1
6	USB 2.0 Type A - Micro B cable	1

BOM DETAILS

LI-NANO-CB-IMX274M12 / LI-NANO-CB-POE-IMX274M12

#	Items	QTY
1	LI-NANO-CB or LI-NANO-CB-POE	1
2	Nvidia Jetson NANO SOM	1
3	LI-IMX274-MIPI-M12	1
4	FAW-1233-03 cable	1
5	DC 12V power supply	1
6	USB 2.0 Type A - Micro B cable	1

LI-NANO-CB-IMX274M12-D / LI-NANO-CB-POE-IMX274M12-D

#	Items	QTY
1	LI-NANO-CB or LI-NANO-CB-POE	1
2	Nvidia Jetson NANO SOM	1
3	LI-IMX274-MIPI-M12	2
4	FAW-1233-03 cable	2
5	DC 12V power supply	1
6	USB 2.0 Type A - Micro B cable	1

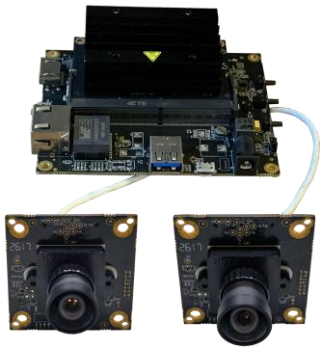

LI-NANO-CB-IMX274M12-T / LI-NANO-CB-POE-IMX274M12-T

#	Items	QTY
1	LI-NANO-CB or LI-NANO-CB-POE	1
2	Nvidia Jetson NANO SOM	1
3	LI-IMX274-MIPI-M12	3
4	FAW-1233-03 cable	3
5	DC 12V power supply	1
6	USB 2.0 Type A - Micro B cable	1

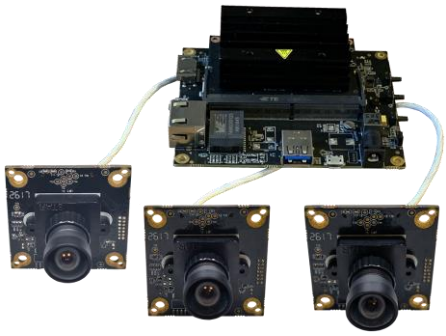

LI-NANO-CB-IMX274M12-Q / LI-NANO-CB-POE-IMX274M12-Q

#	Items	QTY
1	LI-NANO-CB or LI-NANO-CB-POE	1
2	Nvidia Jetson NANO SOM	1
3	LI-IMX274-MIPI-M12	4
4	FAW-1233-03 cable	4
5	DC 12V power supply	1
6	USB 2.0 Type A - Micro B cable	1

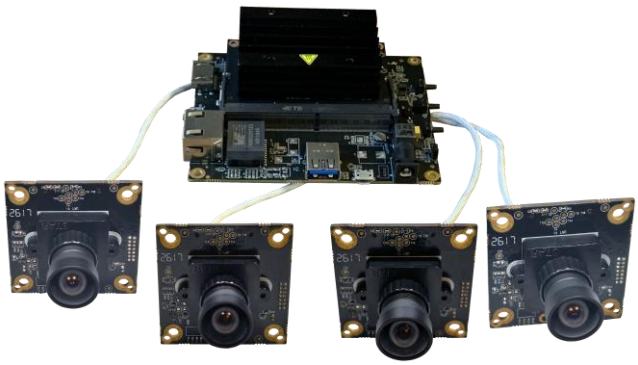

REGISTER INFORMATION

Device (on LI-NANO-CB)	Switching Parameter (7-bit)
tca9548 (I2C switcher)	0x70
J13 (CAM1)	0x00
J3 (CAM2)	0x01
J25 (CAM3)	0x02
J26 (CAM4)	0x03

Device (on LI-IMX274-MIPI)	I2C Address (7-bit)
tca9570 (I/O Expander for IRC switcher)	0x24
IMX274 sensor	0x1A

POWER CONSUMPTION

Opened Cameras	Power Consumption
No camera	Around 200 mA @ 12 VDC
1 camera (3840 x 2160 @ 30 fps)	Around 400 mA @ 12 VDC
2 cameras (3840 x 2160 @ 30 fps)	Around 570mA @ 12 V DC
3 cameras (3840 x 2160 @ 30 fps)	Around 750 mA @ 12 VDC
4 cameras (3840 x 2160 @ 30 fps)	Around 930 mA @ 12 VDC

LI-NANO-CB / LI-NANO-CB-POE

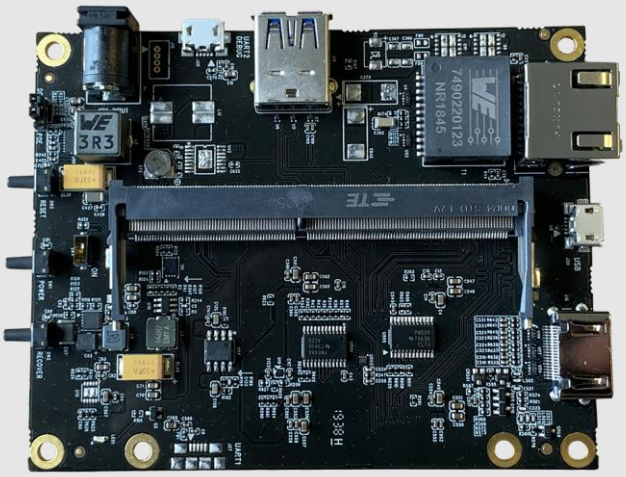

INTERFACES

Interface J13 (CAM1)

- Part#: 20525-030E-02
- Number of Positions: 30
- Pitch: 0.4 mm
- Mating I-PEX Cable: FAW-1233-XX

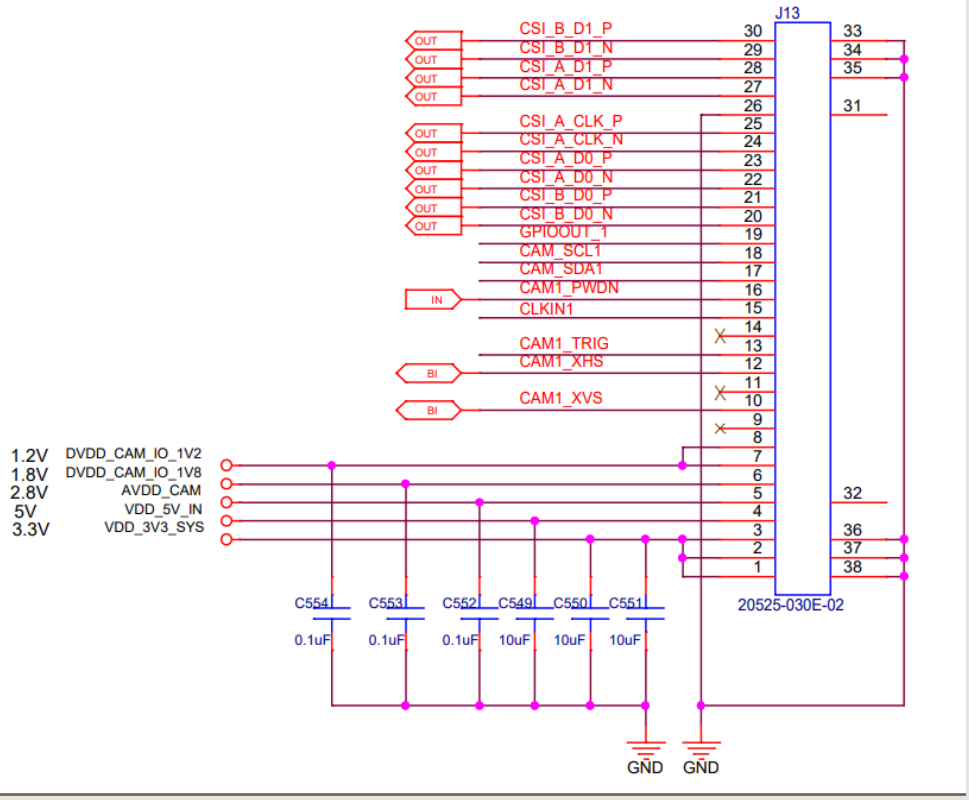

LI-NANO-CB / LI-NANO-CB-POE

INTERFACES

Interface J3 (CAM2)

- Part#: 20525-030E-02
- Number of Positions: 30
- Pitch: 0.4 mm
- Mating I-PEX Cable: FAW-1233-XX

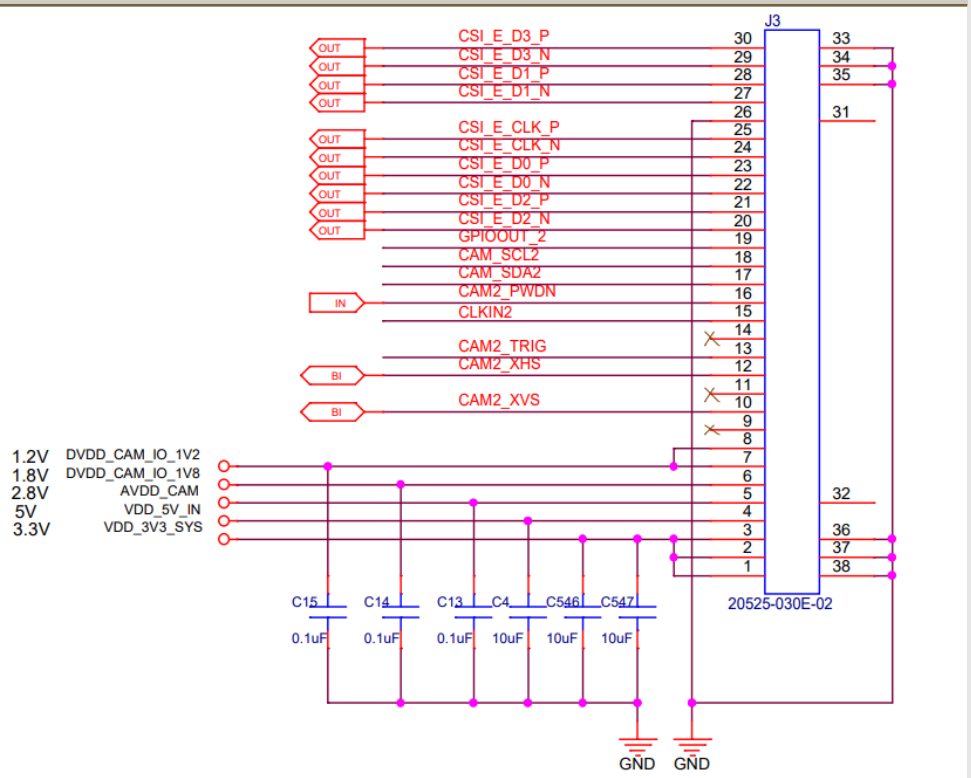

Interface J25 (CAM3)

- Part#: 20525-030E-02
- Number of Positions: 30
- Pitch: 0.4 mm
- Mating I-PEX Cable: FAW-1233-XX

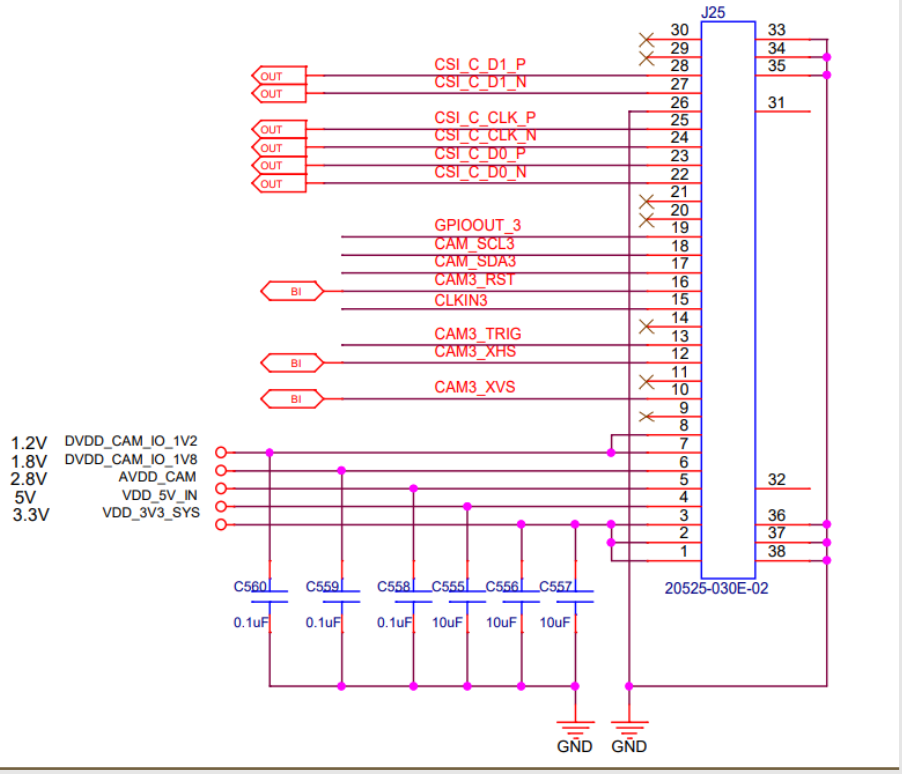

LI-NANO-CB / LI-NANO-CB-POE

INTERFACES

Interface J26 (CAM4)

- Part#: 20525-030E-02
- Number of Positions: 30
- Pitch: 0.4 mm
- Mating I-PEX Cable: FAW-1233-XX

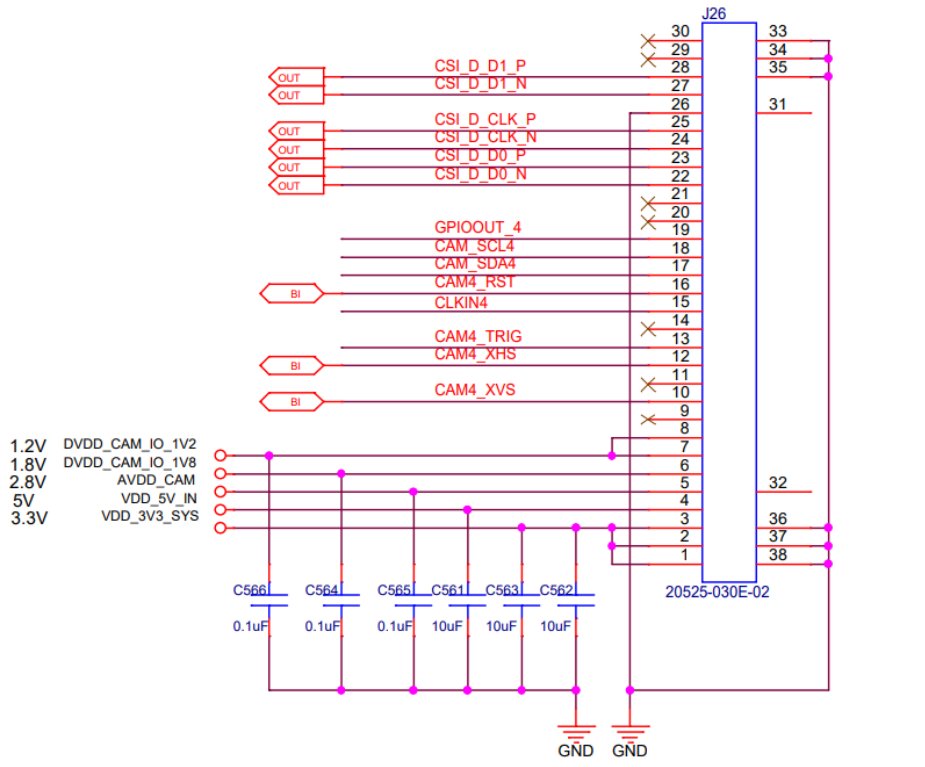

Interface J18 (I2C Header)

- Number of Positions: 4
- Pitch: 1.25 mm

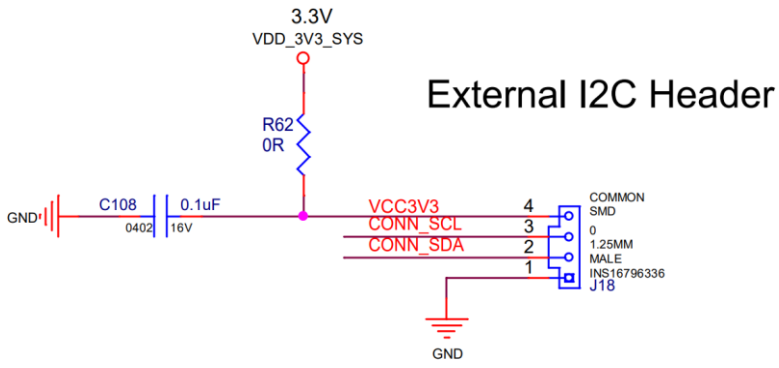

LI-NANO-CB / LI-NANO-CB-POE

INTERFACES

Interface J27 & J28 (UART)

- USB 2.0 Micro-B interface

NOTE:

J27 is not populated.

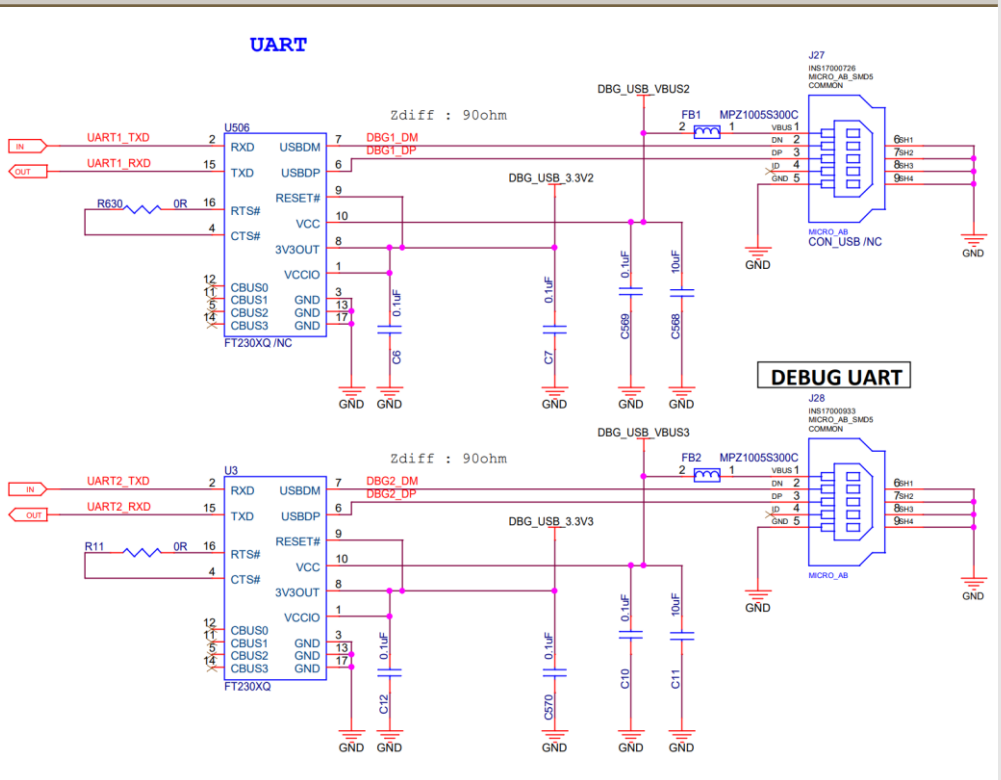

Interface SW4 (Boot Mode)

SW4	Items
ON	Manual boot
OFF	Auto boot

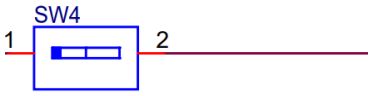

CHS-01TA

SWITCH OFF Auto-Power-On enabled

SWITCH ON Auto-Power-On disabled

LI-NANO-CB / LI-NANO-CB-POE

DIMENSIONS

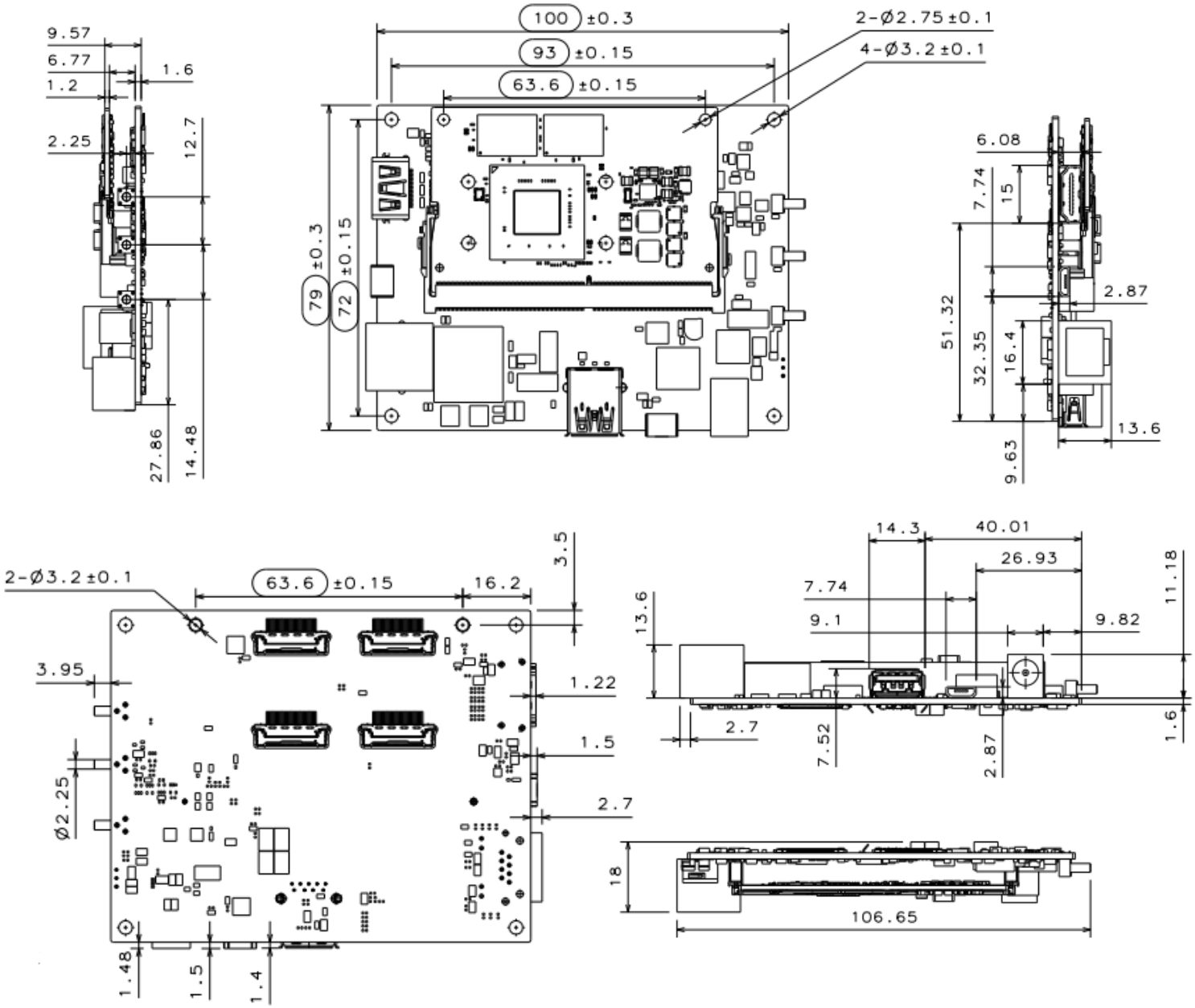

NOTE:

- ▭ marked are important sizes.
- Tolerances for the unmarked are ± 0.3 mm.

Unit: mm

FAW-1233-03 Cable

MECHANICAL DIAGRAM

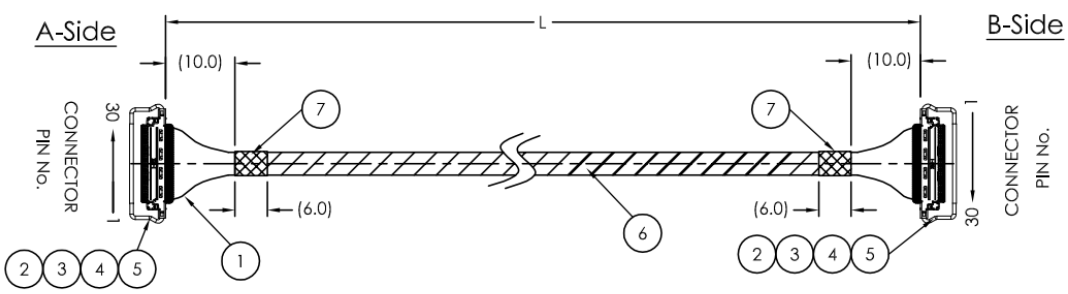

Fig. 1 Applying UV resin

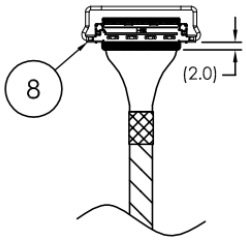

WIRING

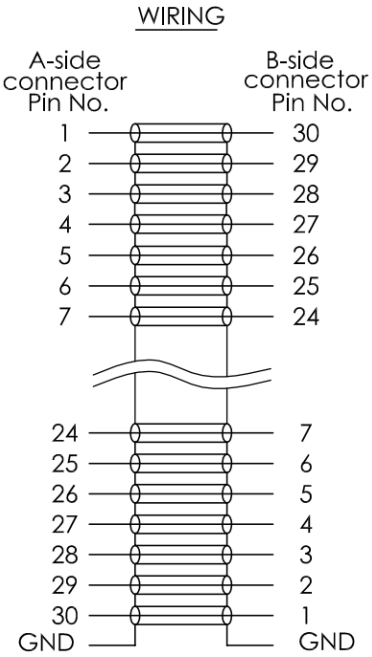

NOTE:

- Total length: 300.0 ± 10.0.
- Apply UV resin at the end of connector to cover cables both sides of the cable assembly (Fig.1).

Unit: mm

LI-IMX274-MIPI-M12

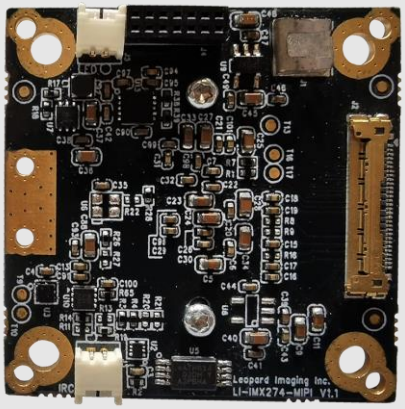

CAMERA SPECIFICATIONS

Sensor	Sony Diagonal 7.20 mm (Type 1/2.5) CMOS Image Sensor IMX274
Optical Format	1/2.5"
Resolution	3864 (H) x 2196 (V) (active pixels)
Pixel Size	1.62 x 1.62 µm
Output Format	10-bit / 12-bit RAW data
Maximum Frame Rate	60 fps @ 3840 x 2160
ISP	Not included
Color / Mono	Color sensor
Interface	4-lane MIPI CSI-2
Operating Temp	-20℃ ~ +75℃
Storage Temp	-20℃ ~ +75℃
Weight	~ 14 g
Part#	LI-IMX274-MIPI-M12

LI-IMX274-MIPI-M12

INTERFACES

Interface J2

- Part#: 20525-030E-02
- Number of Positions: 30
- Pitch: 0.4 mm
- Mating I-PEX Cable: LI-FAW-1233
- Sensor SLAVE address: 0x1A (7-bit)
- External power supply: 3.3V
- 1.8V is generated from sensor board
- 5.0V is not used since it's for IR cut switch function only

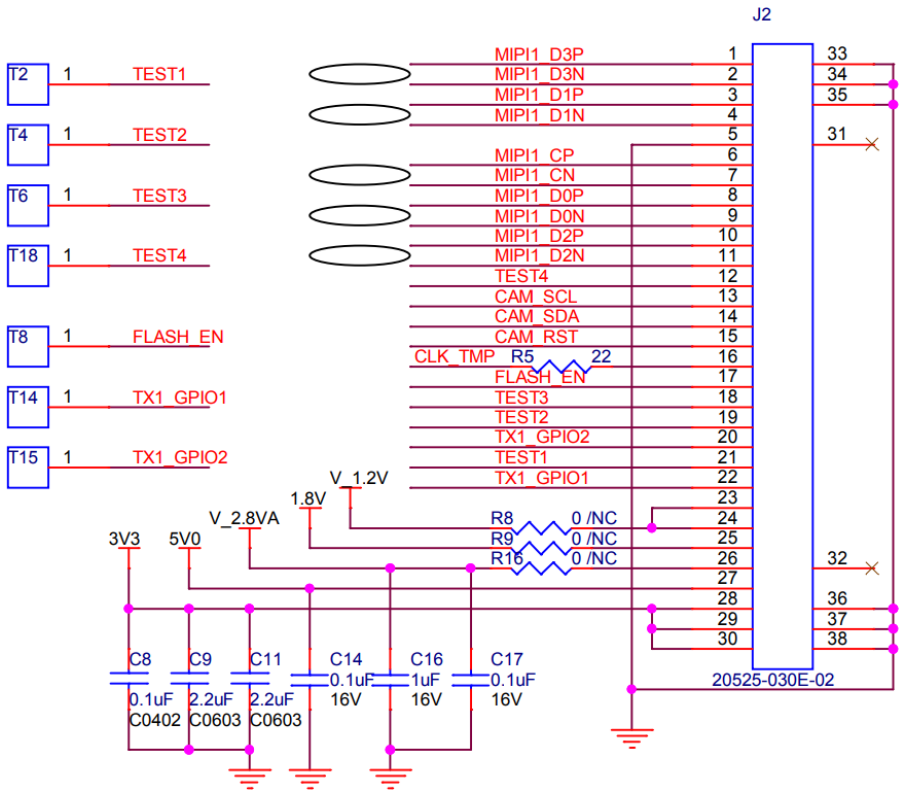

Interface J3

- Connector Part#: 1734829-2
- Number of Positions: 2
- Pitch: 1.25 mm

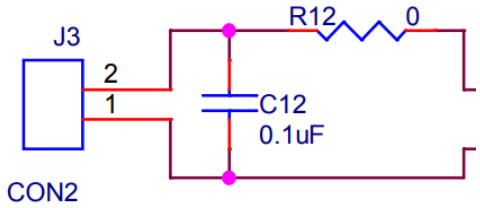

Interface J5

- Connector Part#: 1734829-2
- Number of Positions: 2
- Pitch: 1.25 mm

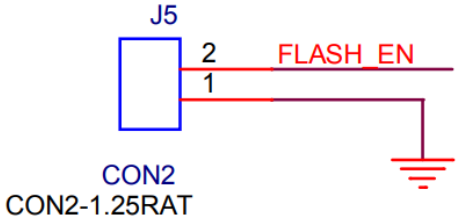

LI-IMX274-MIPI-M12

DIMENSIONS

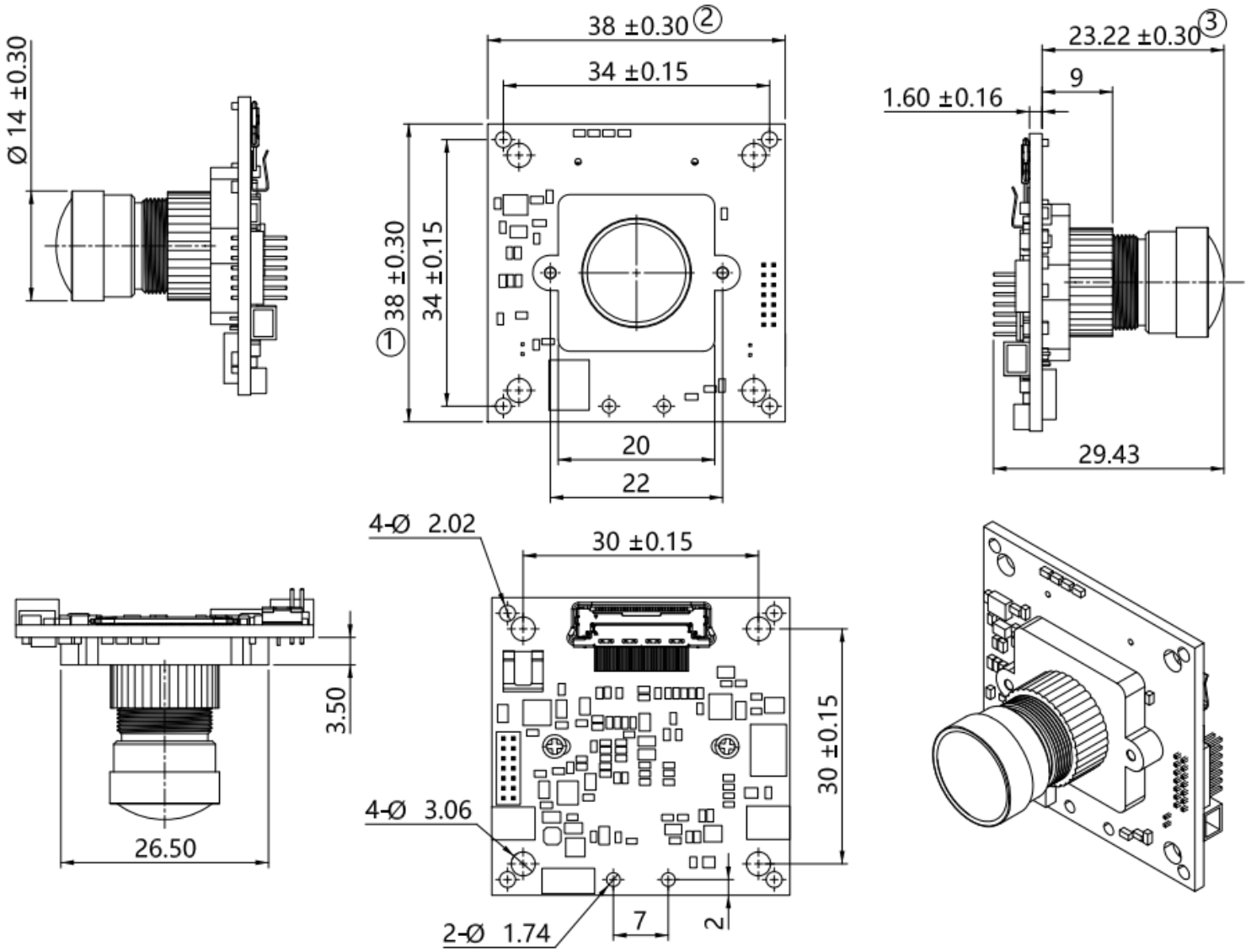

NOTE:

- ⊗ marked are important sizes.
- Tolerances for others unmarked are ± 0.3 mm.

Unit: mm

REVISION HISTORY

Revision	Description	Release Date
1.0	First release.	18 Nov 2019
1.1	Added LI-NANO-CB-POE option.	23 Nov 2019
1.2	Added register info and power consumption.	09 Dec 2019
1.3	Deleted info quoted from sensor spec.	25 May 2022
1.4	Updated lens information as well as related product images and 2D dimensions.	10 Oct 2022

910 Auburn Ct, Fremont, CA 94538, USA
Phone: +1-408-263-0988
Fax: +1-408-217-1960
Email: sales@leopardimaging.com
Website: www.leopardimaging.com

Leopard Imaging Inc.