LI-NANO-CB-IMX264M12-X Data Sheet

Key Features

- Compatible with Nvidia® Jetson NANO™
- MIPI CSI-2 interface
- Supports up to four cameras (2-lane mode)
- Sony Diagonal 11.1 mm (Type 2/3) CMOS Image Sensor IMX264
- Active pixels: 2464 (H) x 2056 (V)
- Pixel size: 3.45 x 3.45 µm
- Color camera
- Global shutter
- Supports 2432 x 2058 @ 24.5 fps
- Supports PoE (options)
- I-PEX cable part#: FAW-1233-03
- Length of the I-PEX cable: 300 mm
- Supports multiple length cables
- MIPI connector part#: 20525-030E-02
- Supports M12 lens
- Provides driver binary and source code
- Allows customization
- Part#:

LI-NANO-CB-IMX264M12-X
LI-NANO-CB-POE-IMX264M12-X

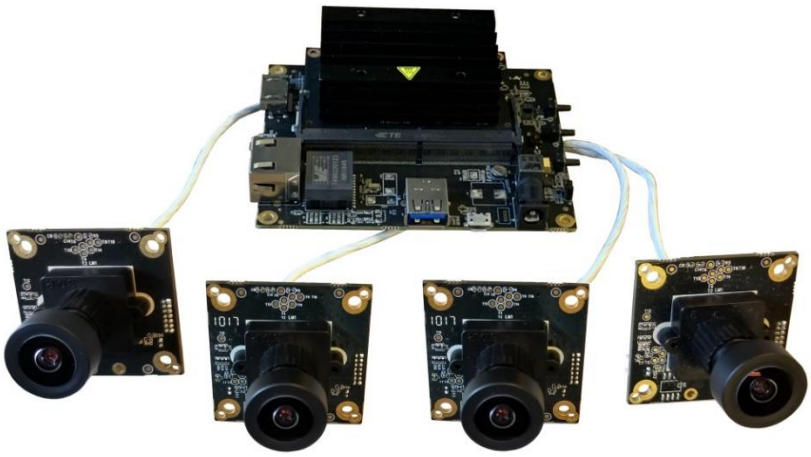

Lens Spec

- Focal Length: 12 mm
- Aperture, F/#: 2.5
- Built in 650 nm IR cut filter
- FOV (H): 37°
- TV Distortion: < -1.2 %

BOM

#	Items	QTY
1	LI-NANO-CB V1.2 or LI-NANO-CB-POE V1.2	1
2	Nvidia Jetson Nano SOM	1
3	LI-IMX264-MIPI-M12	1,2,3 or 4
4	FAW-1233-03 cable	1,2,3 or 4
5	DC 12V power supply	1
6	USB 2.0 Type A - Micro B cable	1

Leopard Imaging Inc.

910 Auburn Ct, Fremont, CA 94538, USA
Phone: +1-408-263-0988
Fax: +1-408-217-1960
Email: sales@leopardimaging.com
Website: www.leopardimaging.com

Order Information

LI-NANO-CB-IMX264M12 / LI-NANO-CB-POE-IMX264M12

BOM

#	Items	QTY
1	LI-NANO-CB or LI-NANO-CB-POE	1
2	Nvidia Jetson Nano SOM	1
3	LI-IMX264-MIPI-M12	1
4	FAW-1233-03 cable	1
5	DC 12V power supply	1
6	USB 2.0 Micro B cable	1

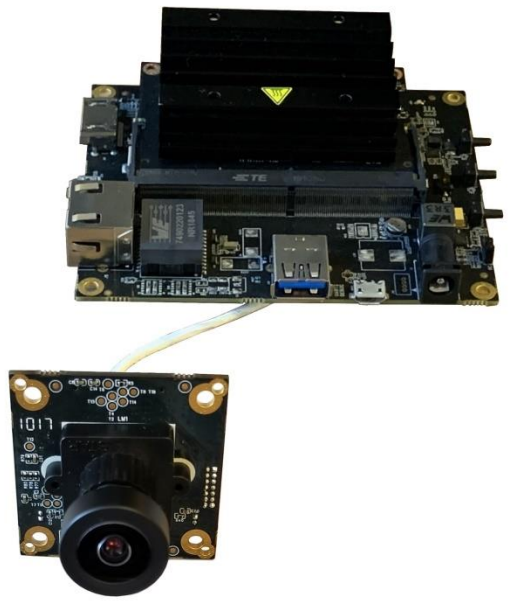

LI-NANO-CB-IMX264M12-D / LI-NANO-CB-POE-IMX264M12-D

BOM

#	Items	QTY
1	LI-NANO-CB or LI-NANO-CB-POE	1
2	Nvidia Jetson Nano SOM	1
3	LI-IMX264-MIPI-M12	2
4	FAW-1233-03 cable	2
5	DC 12V power supply	1
6	USB 2.0 Micro B cable	1

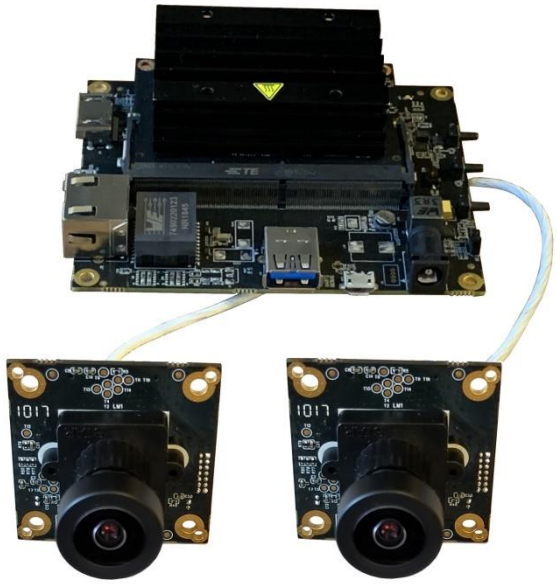

Leopard Imaging Inc.

910 Auburn Ct, Fremont, CA 94538, USA
Phone: +1-408-263-0988
Fax: +1-408-217-1960
Email: sales@leopardimaging.com
Website: www.leopardimaging.com

LI-NANO-CB-IMX264M12-T / LI-NANO-CB-POE-IMX264M12-T

BOM

#	Items	QTY
1	LI-NANO-CB or LI-NANO-CB-POE	1
2	Nvidia Jetson Nano SOM	1
3	LI-IMX264-MIPI-M12	3
4	FAW-1233-03 cable	3
5	DC 12V power supply	1
6	USB 2.0 Micro B cable	1

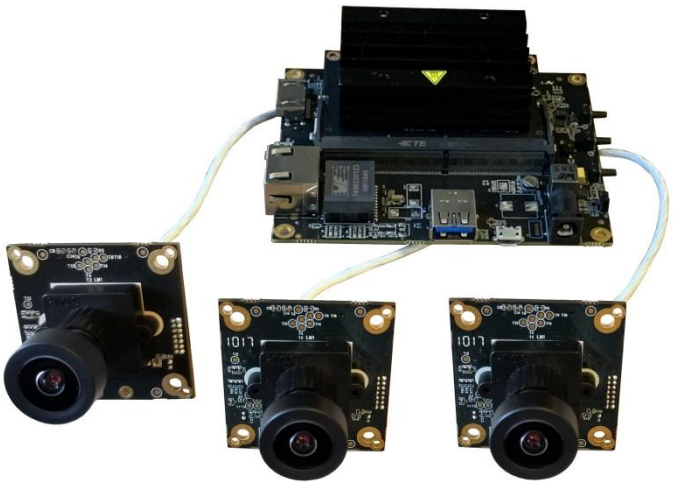

LI-NANO-CB-IMX264M12-Q / LI-NANO-CB-POE-IMX264M12-Q

BOM

#	Items	QTY
1	LI-NANO-CB or LI-NANO-CB-POE	1
2	Nvidia Jetson Nano SOM	1
3	LI-IMX264-MIPI-M12	4
4	FAW-1233-03 cable	4
5	DC 12V power supply	1
6	USB 2.0 Micro B cable	1

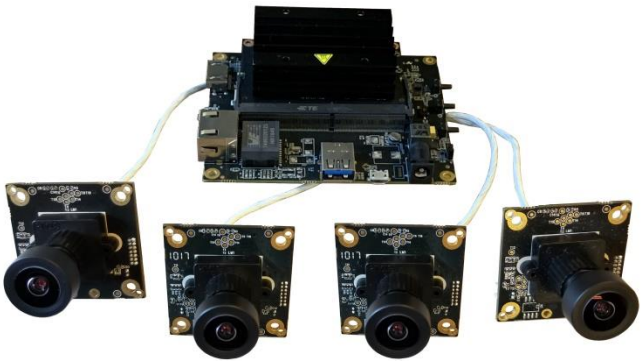

Leopard Imaging Inc.

910 Auburn Ct, Fremont, CA 94538, USA
Phone: +1-408-263-0988
Fax: +1-408-217-1960
Email: sales@leopardimaging.com
Website: www.leopardimaging.com

Register Information

Device (on LI-NANO-CB)	Switching Parameter (7-bit)
tca9548 (I2C switcher)	0x70
J13 (CAM1)	0x00
J3 (CAM2)	0x01
J25 (CAM3)	0x02
J26 (CAM4)	0x03

Device (on LI-IMX264-MIPI)	Switching Parameter (7-bit)
tca9570 (I/O Expander for IRC switcher)	0x24
FPGA	0x3C
IMX264 sensor	0x10

Power Consumption

Opened Cameras	Power Consumption
No camera	Around 200mA @ 12V
1 camera (2432x2058@24.5fps)	TBD
2 cameras (2432x2058@24.5fps)	TBD
3 cameras (2432x2058@24.5fps)	TBD
4 cameras (2432x2058@24.5fps)	TBD

Auto Boot

SW4	Boot Mode
ON	Manual boot
OFF	Auto boot

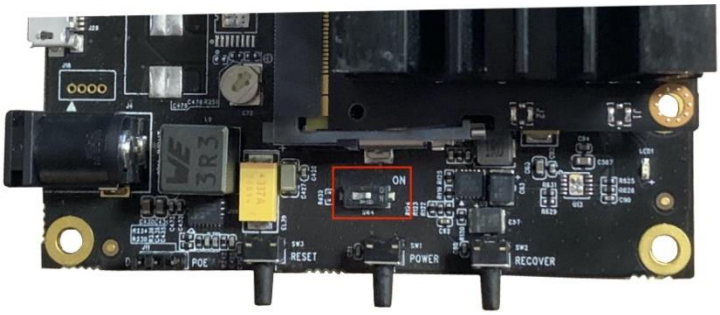

Leopard Imaging Inc.

910 Auburn Ct, Fremont, CA 94538, USA
Phone: +1-408-263-0988
Fax: +1-408-217-1960
Email: sales@leopardimaging.com
Website: www.leopardimaging.com

Dimensions

LI-IMX264-MIPI-M12

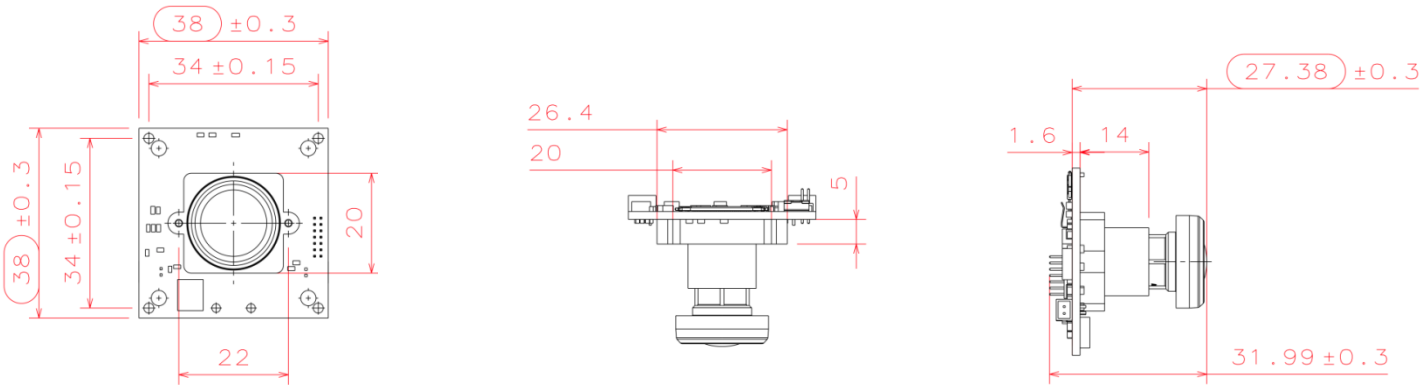

LI-NANO-CB / LI-NANO-CB-POE

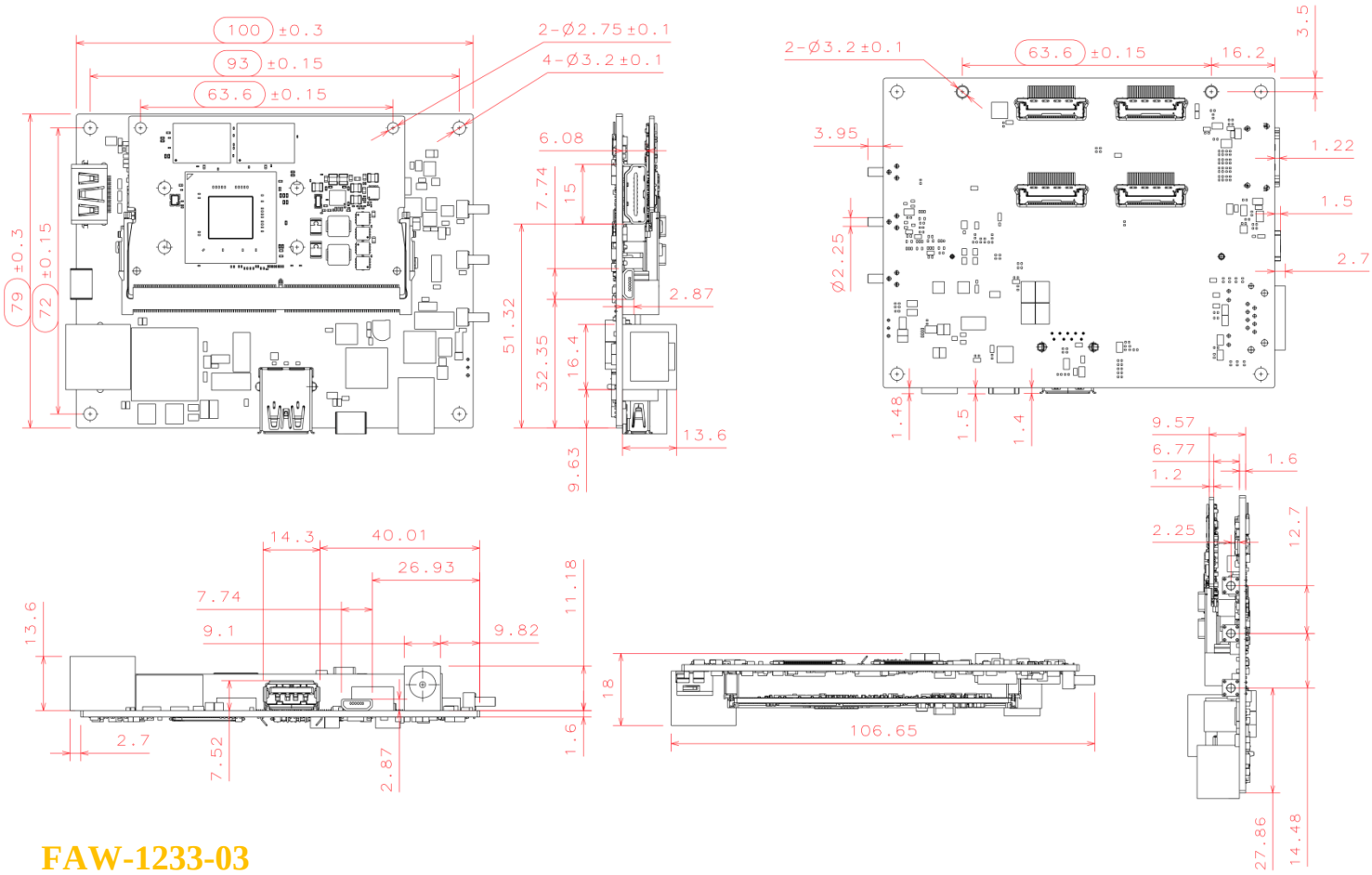

FAW-1233-03

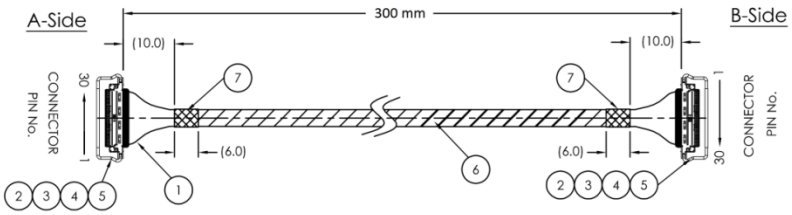

Leopard Imaging Inc.

910 Auburn Ct, Fremont, CA 94538, USA
Phone: +1-408-263-0988
Fax: +1-408-217-1960
Email:sales@leopardimaging.com
Website: www.leopardimaging.com

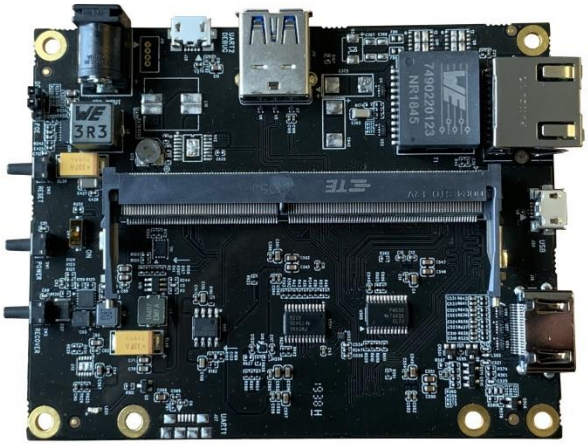

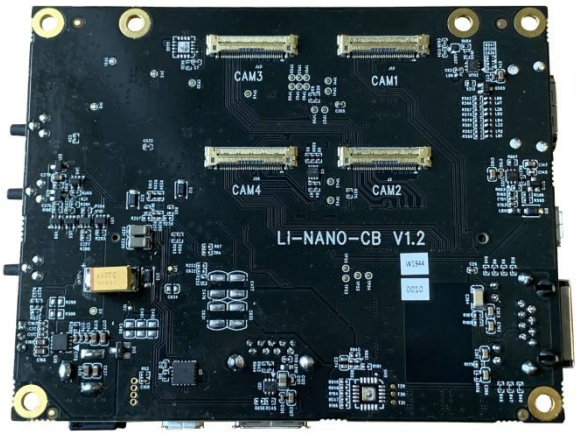

Camera Interfaces

Interface J13 (CAM1)	
▪ Part#: 20525-030E-02 ▪ Number of Positions: 30 ▪ Pitch: 0.4 mm ▪ Mating I-PEX cable: FAW-1233-xx	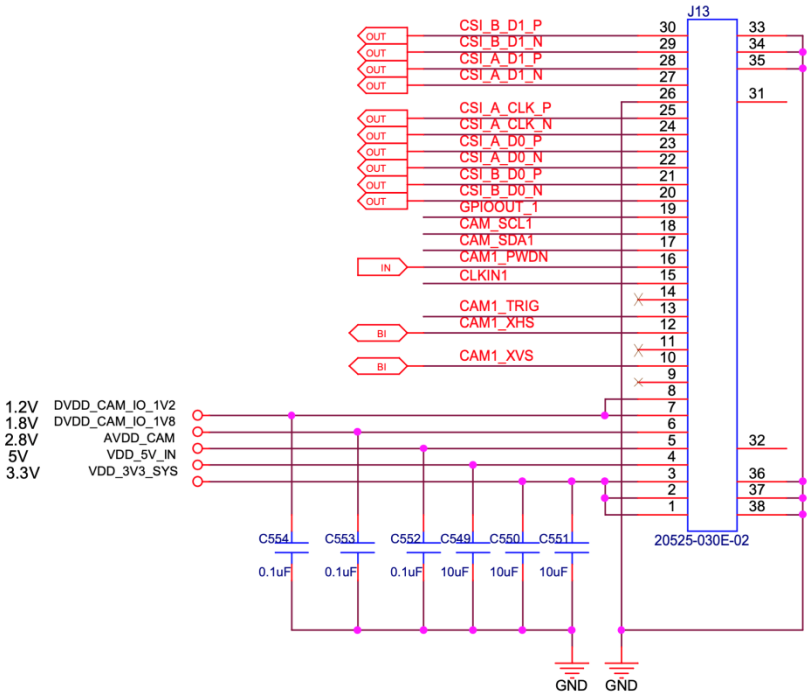

Leopard Imaging Inc.

910 Auburn Ct, Fremont, CA 94538, USA
Phone: +1-408-263-0988
Fax: +1-408-217-1960
Email:sales@leopardimaging.com
Website: www.leopardimaging.com

Interface J3 (CAM2)

- Part#: 20525-030E-02
- Number of Positions: 30
- Pitch: 0.4 mm
- Mating I-PEX cable: FAW-1233-xx

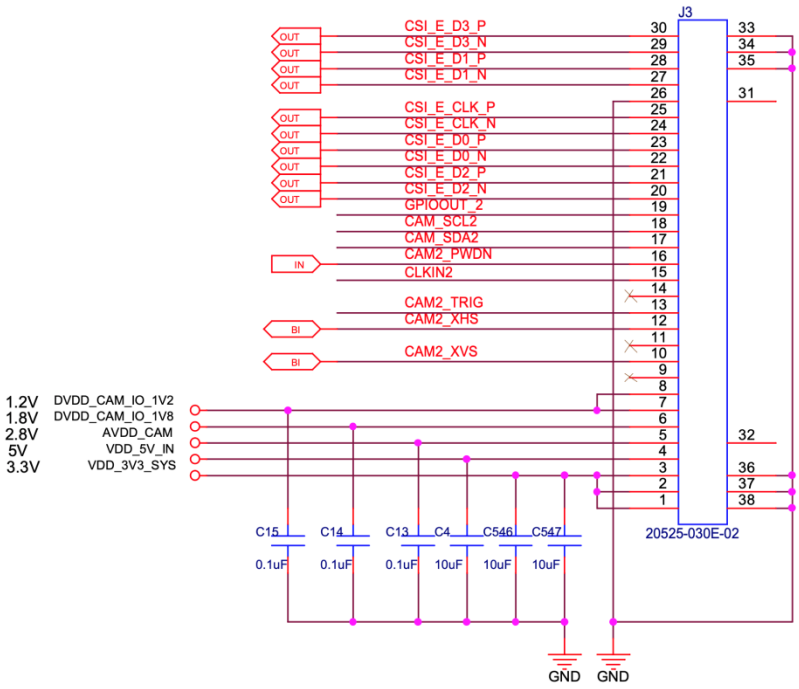

Interface J25 (CAM3)

- Part#: 20525-030E-02
- Number of Positions: 30
- Pitch: 0.4 mm
  Mating I-PEX cable: FAW-1233-xx

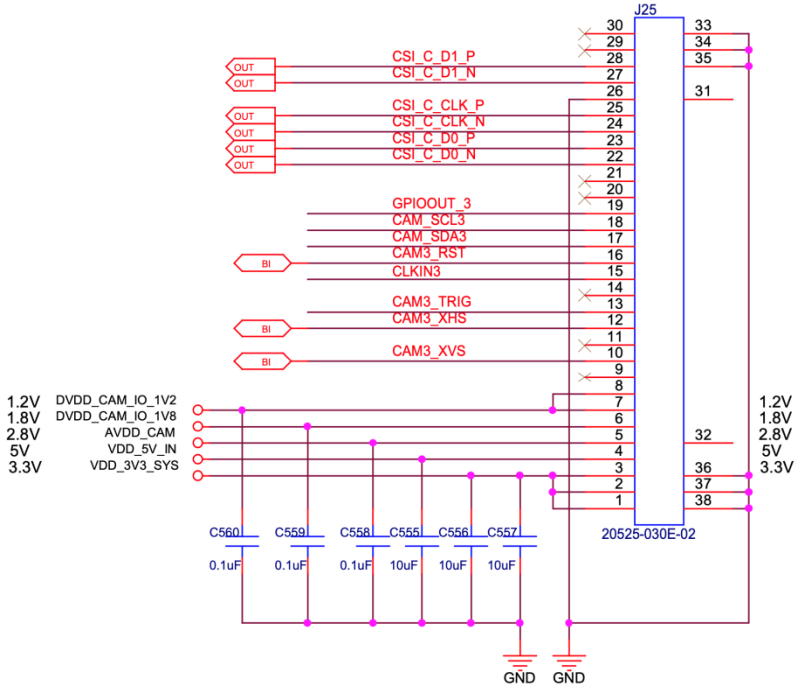

Leopard Imaging Inc.

910 Auburn Ct, Fremont, CA 94538, USA
Phone: +1-408-263-0988
Fax: +1-408-217-1960
Email:sales@leopardimaging.com
Website: www.leopardimaging.com

Interface J26 (CAM4)

- Part#: 20525-030E-02
- Number of Positions: 30
- Pitch: 0.4 mm
- Mating I-PEX cable: FAW-1233-xx

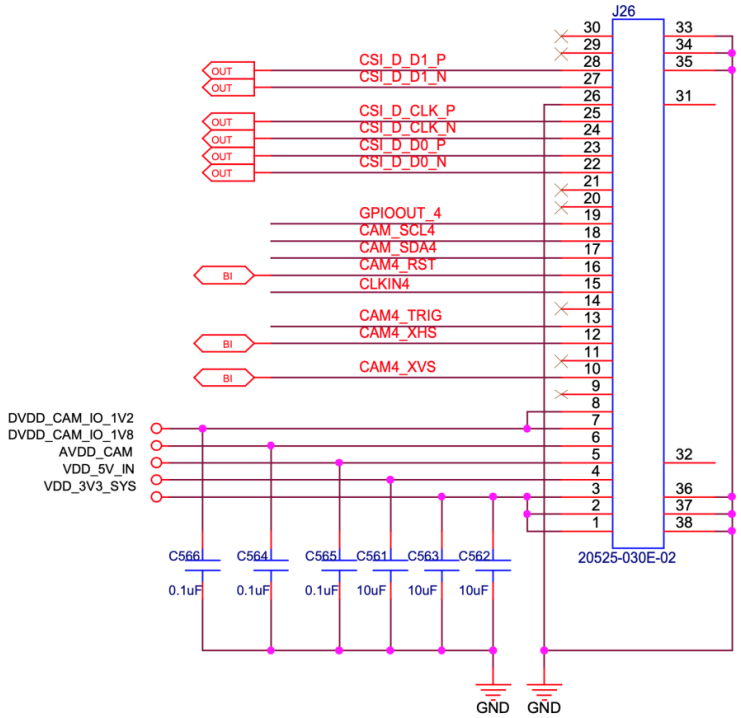

Interface J18 (I2C Header)

- Number of Positions: 4
- Pitch: 1.25 mm

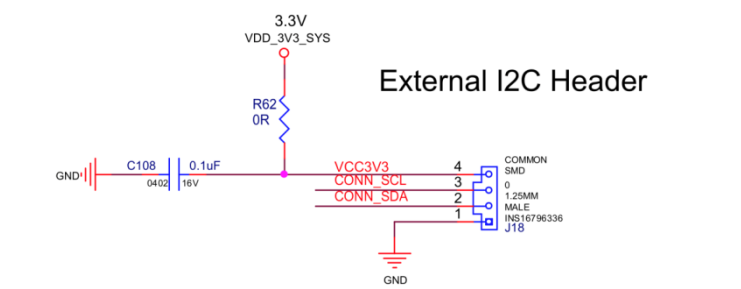

J27, J28 (UART)

- USB 2.0 micro-B interface

Note: R27 is not populated.

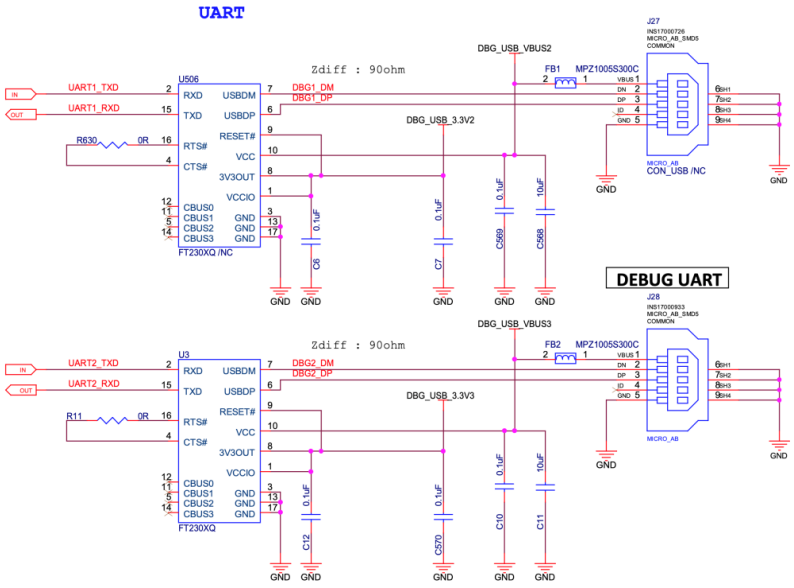

Leopard Imaging Inc.

910 Auburn Ct, Fremont, CA 94538, USA
Phone: +1-408-263-0988
Fax: +1-408-217-1960
Email:sales@leopardimaging.com
Website: www.leopardimaging.com

LI-IMX264-MIPI-M12

Camera Spec	
Image sensor	Sony Diagonal 11.1 mm (Type 2/3) CMOS Image Sensor IMX264
Optical format	2/3"
Number of active pixels	2464 (H) x 2056 (V)
Pixel size	3.45 x 3.45 µm
Color or Mono	Color
Interface	MIPI interface
Lens mount	M12
Weight	~ 14 g
Interfaces	
Interface J4: ▪ Part#: 20525-030E-02 ▪ Number of Positions: 30 ▪ Pitch: 0.4 mm ▪ Mating I-PEX cable: FAW-1233-03 (300 mm)	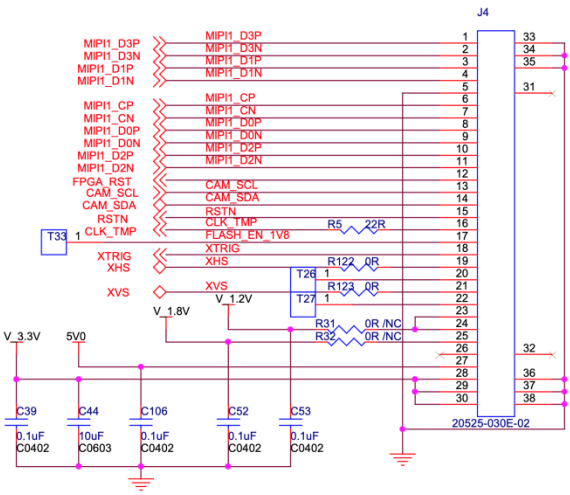
Interface J8: ▪ Part#: 1734829-2 ▪ Number of Positions: 2 ▪ Pitch: 1.25 mm	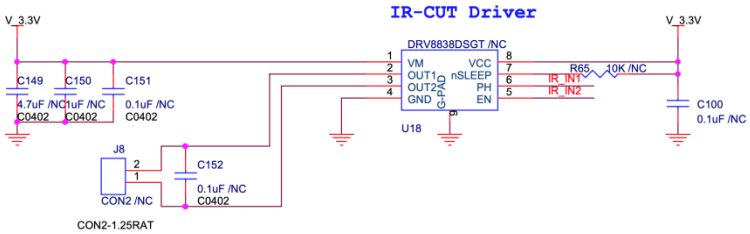
Interface J2: ▪ Part#: 20021321-00010C4LF ▪ Number of Positions: 10 ▪ Pitch: 1.27 mm	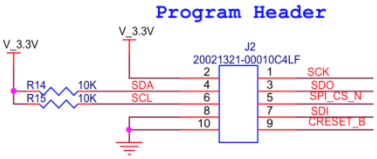

Leopard Imaging Inc.

910 Auburn Ct, Fremont, CA 94538, USA
Phone: +1-408-263-0988
Fax: +1-408-217-1960
Email: sales@leopardimaging.com
Website: www.leopardimaging.com

Revision History

Revision	Description	Release Date
1.0	First release.	2. Feb. 2020
1.1	Deleted info quoted from sensor spec.	25. May. 2022
1.2	Deleted lens model info.	03. Aug. 2023

910 Auburn Ct, Fremont, CA 94538, USA
Phone: +1-408-263-0988
Fax: +1-408-217-1960
Email: sales@leopardimaging.com
Website: www.leopardimaging.com