LI-XAVIER-KIT-IMX185M12-X

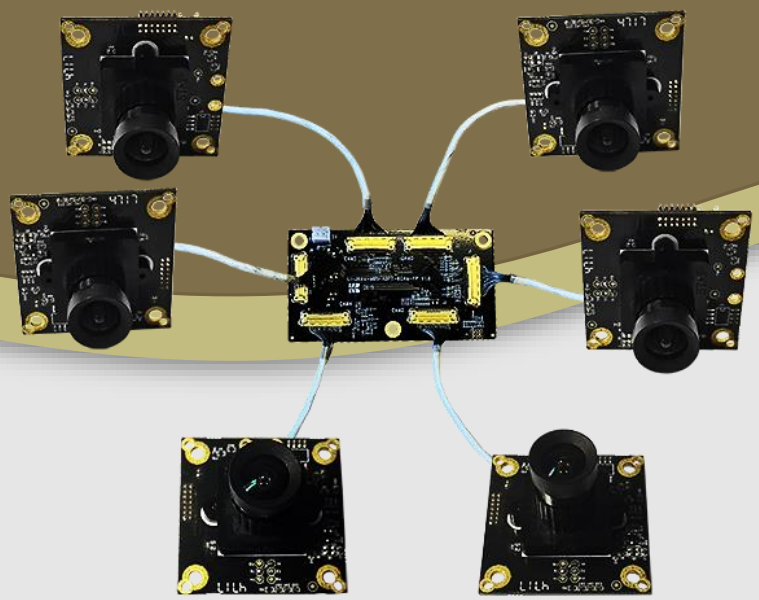

Address:
910 Auburn Ct
Fremont, CA 94538
USA

Phone:
+1 (408)263-0988
Fax:
+1 (408)217-1960

Sales:
sales@leopardimaging.com
Support:
support@leopardimaging.com

KEY FEATURES

- Compatible with Nvidia® Jetson AGX Xavier™ Developer Kit
- MIPI CSI-2 interface
- Supports up to six cameras
- Two adapter board options:

  LI-JXAV-MIPI-ADPT-4CAM

  LI-JXAV-MIPI-ADPT-6CAM-FP
- Sensor: Sony Diagonal 8.58 mm Type 1/1.9 CMOS Image Sensor IMX185LQJ
- Active pixels: 1937 (H) x 1217 (V)
- Color camera
- Length of the I-PEX cable: ~ 300 mm
- Supports multiple length cables
- Connector Part#: 20525-030E-02
- Allows customization
- Part#: **LI-XAVIER-KIT-IMX185M12-X**

1 Cam	LI-XAVIER-KIT-IMX185M12
2 Cam	LI-XAVIER-KIT-IMX185M12-D
3 Cam	LI-XAVIER-KIT-IMX185M12-T
4 Cam	LI-XAVIER-KIT-IMX185M12-Q
6 Cam	LI-XAVIER-KIT-IMX185M12-H

LENS SPECIFICATIONS

Effective Focal Length	4.2 mm ± 5%
Aperture, F/#	2.5
Field of View (FOV)	82˚ horizontal
Optical Distortion	-1.2%
Relative Illumination	40%
IR Filter	650 nm IR cut filter
Lens Mount	M12 x P0.5

BOM

Nvidia® Jetson AGX Xavier™ Developer Kit is **NOT** included.

#	Items	QTY
1	LI-JXAV-MIPI-ADPT-4CAM or LI-JXAV-MIPI-ADPT-6CAM-FP	1
2	LI-IMX185-MIPI-M12	1, 2, 3, 4 or 6
3	FAW-1233-03 cable	1, 2, 3, 4 or 6

APPLICATIONS

- Industrial Applications
- Intelligent Transportation System (ITS) Cameras

BOM DETAILS

LI-XAVIER-KIT-IMX185M12

#	Items	QTY
1	LI-JXAV-MIPI-ADPT-**4CAM**	1
2	LI-IMX185-MIPI-M12	1
3	FAW-1233-03 cable	1

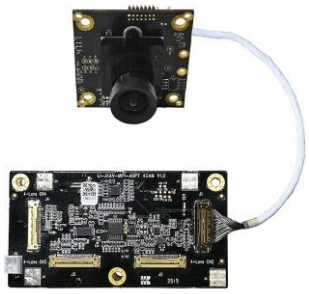

LI-XAVIER-KIT-IMX185M12-D

#	Items	QTY
1	LI-JXAV-MIPI-ADPT-**4CAM**	1
2	LI-IMX185-MIPI-M12	2
3	FAW-1233-03 cable	2

LI-XAVIER-KIT-IMX185M12-T

#	Items	QTY
1	LI-JXAV-MIPI-ADPT-**4CAM**	1
2	LI-IMX185-MIPI-M12	3
3	FAW-1233-03 cable	3

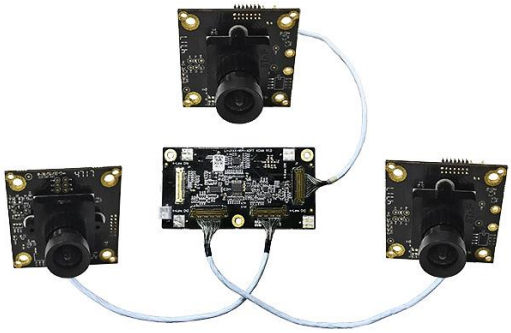

LI-XAVIER-KIT-IMX185M12-Q

#	Items	QTY
1	LI-JXAV-MIPI-ADPT-**4CAM**	1
2	LI-IMX185-MIPI-M12	4
3	FAW-1233-03 cable	4

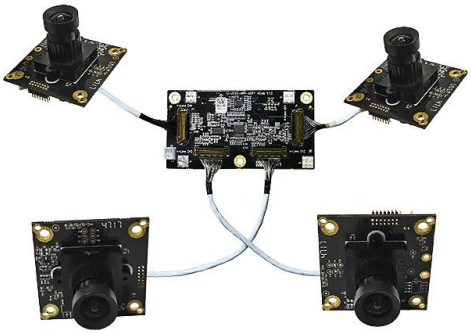

BOM DETAILS

LI-XAVIER-KIT-IMX185M12-H

#	Items	QTY
1	LI-JXAV-MIPI-ADPT-**6CAM-FP**	1
2	LI-IMX185-MIPI-M12	6
3	FAW-1233-03 cable	6

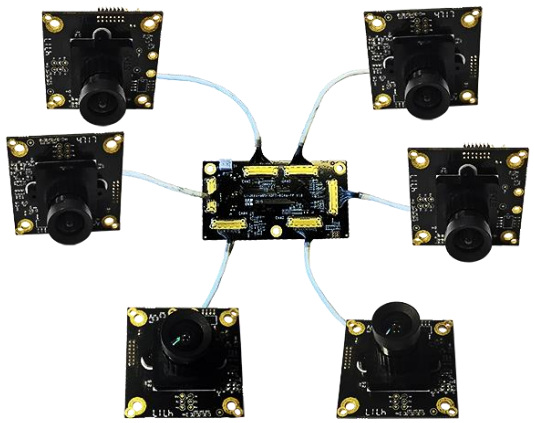

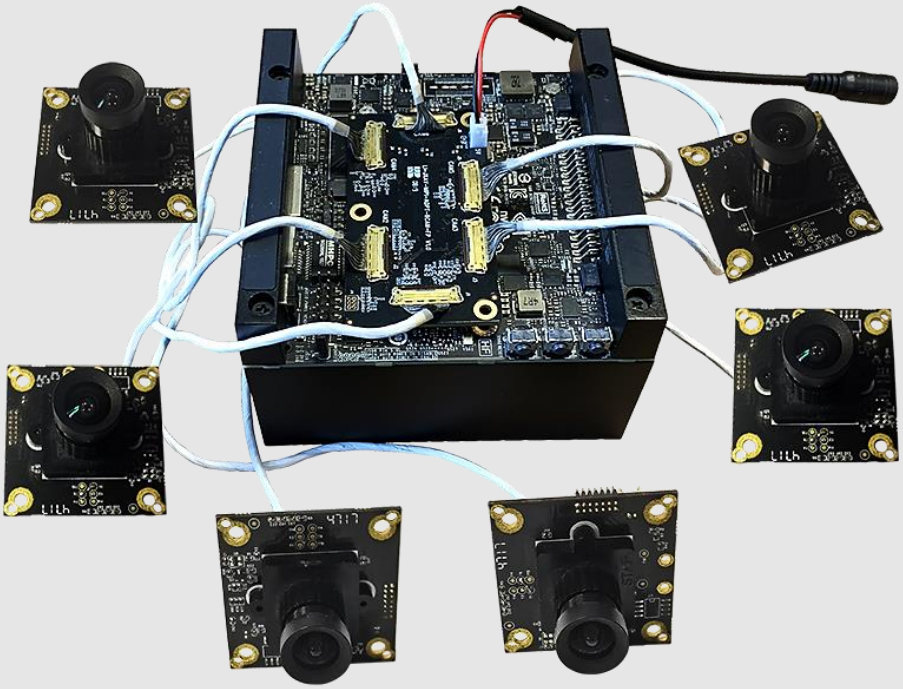

LI-JXAV-MIPI-ADPT-4CAM

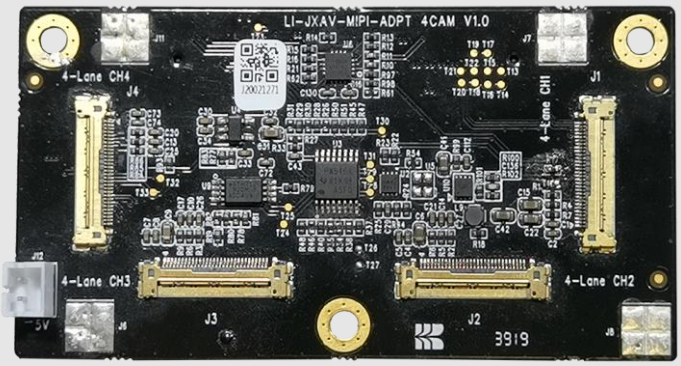

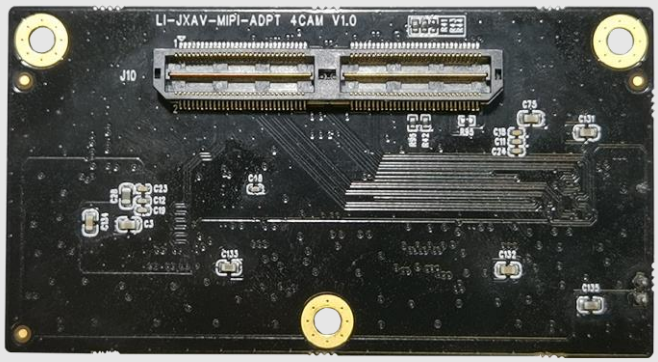

INTERFACES

Interface J1 (Camera Channel 1)

- Part#: 20525-030E-02
- Number of Positions: 30
- Pitch: 0.4 mm
- Mating I-PEX Cable: FAW-1233-XX

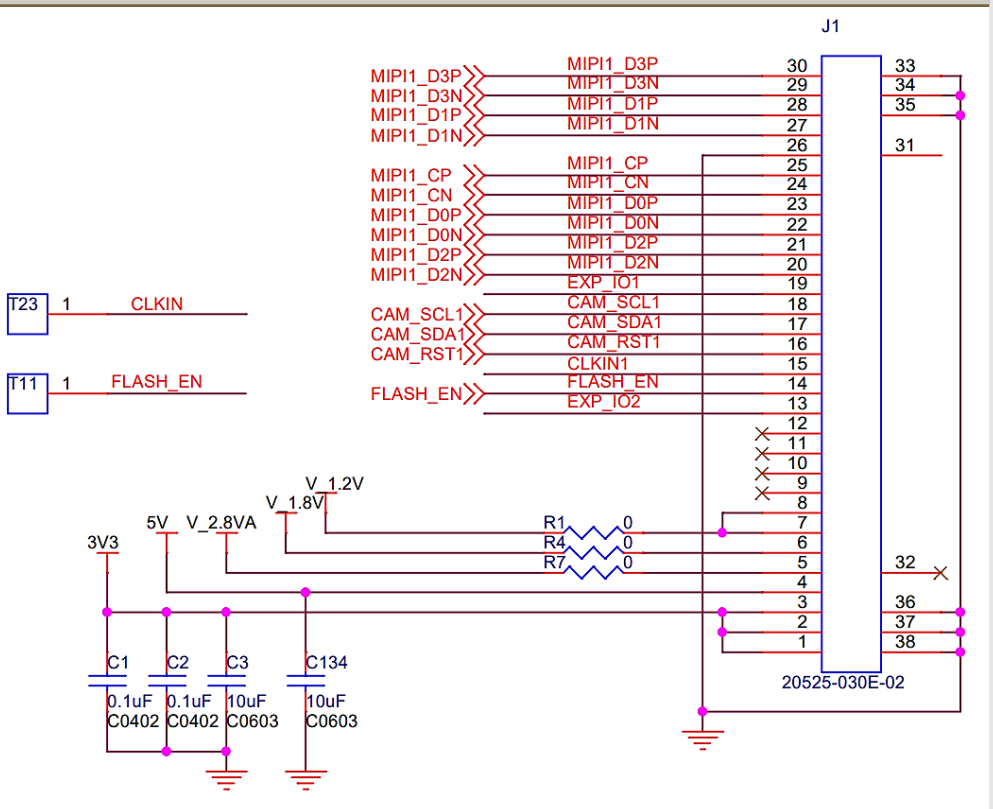

LI-JXAV-MIPI-ADPT-4CAM

INTERFACES

Interface J2 (Camera Channel 2)

- Part#: 20525-030E-02
- Number of Positions: 30
- Pitch: 0.4 mm
- Mating I-PEX Cable: FAW-1233-XX

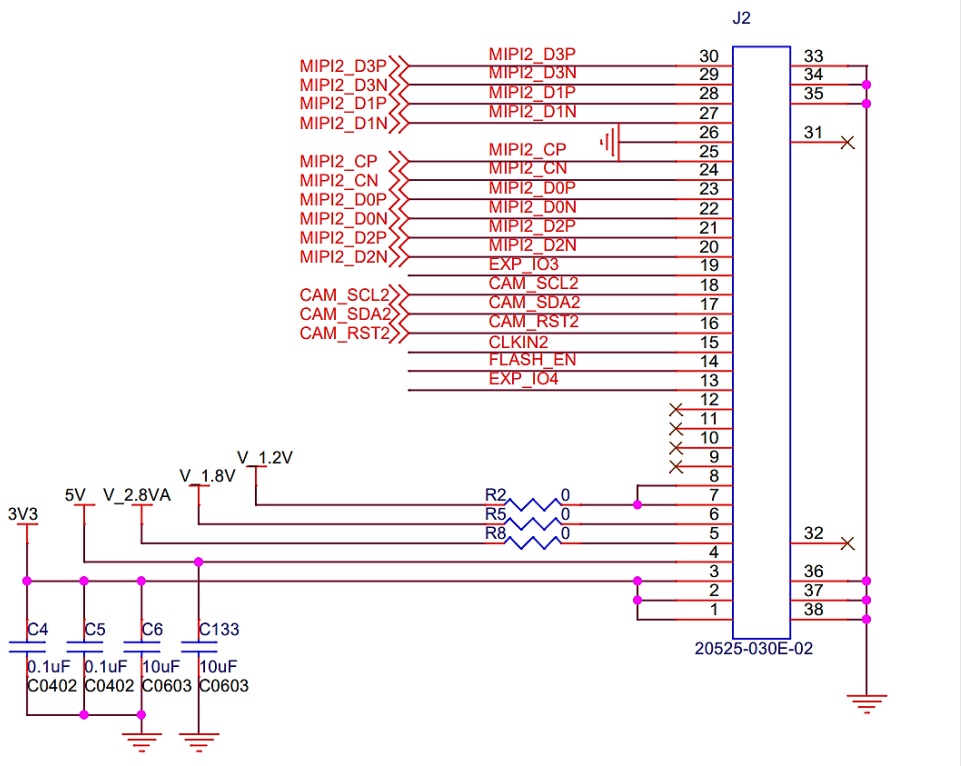

Interface J3 (Camera Channel 3)

- Part#: 20525-030E-02
- Number of Positions: 30
- Pitch: 0.4 mm
- Mating I-PEX Cable: FAW-1233-XX

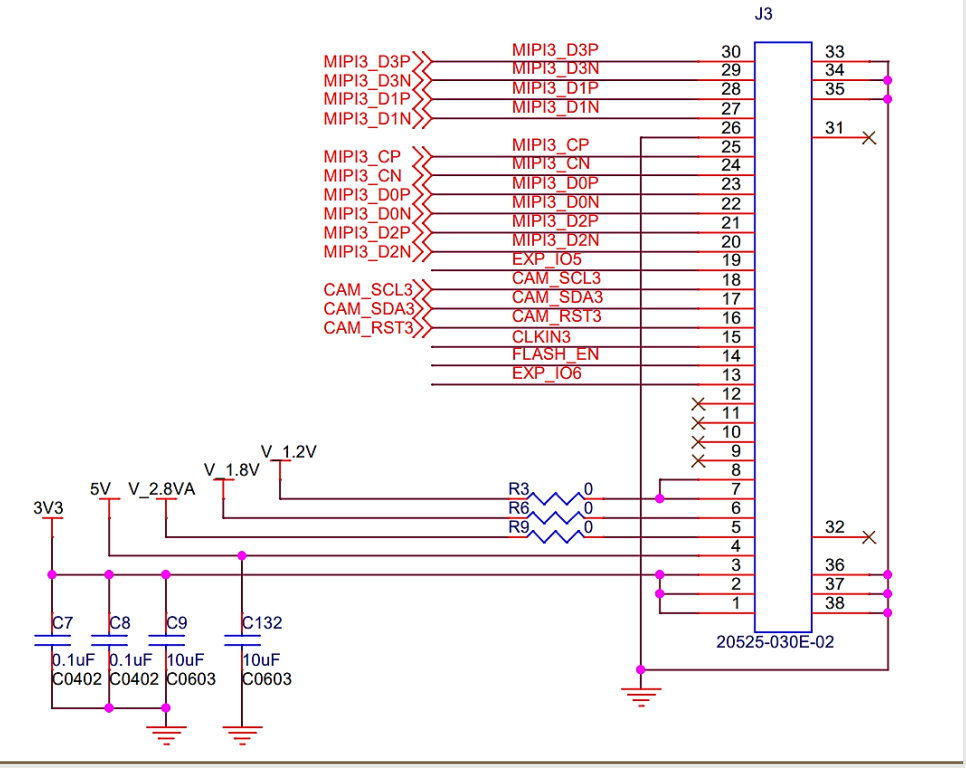

LI-JXAV-MIPI-ADPT-4CAM

INTERFACES

Interface J4 (Camera Channel 4)

- Part#: 20525-030E-02
- Number of Positions: 30
- Pitch: 0.4 mm
- Mating I-PEX Cable: FAW-1233-XX

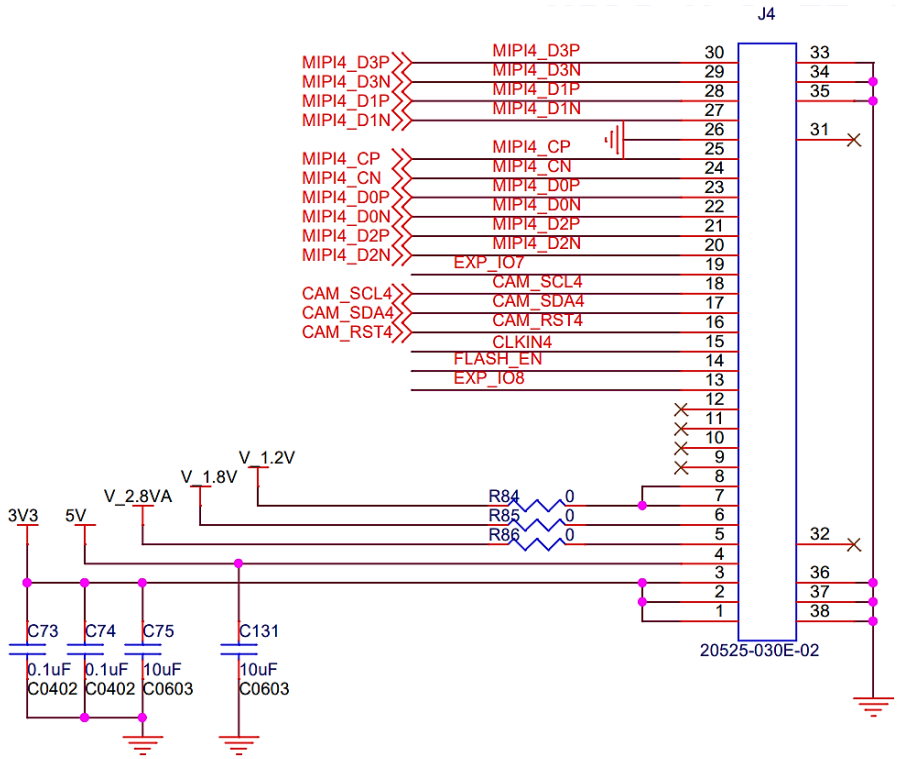

Interface J12 (External 5V Input for IMX185 Sensor)

- Part#: 0894000220
- Number of Positions: 2
- Pitch: 2 mm

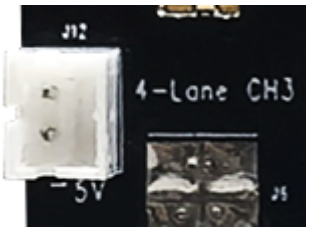

LI-JXAV-MIPI-ADPT-4CAM

INTERFACE J10 (To Xavier)

INTERFACE J10 (To Xavier)	
■ Part#: QTH-060-01-L-D-A ■ Number of Positions: 120 ■ Number of Rows: 2 ■ Pitch: 0.5 mm	

LI-JXAV-MIPI-ADPT-4CAM

DIMENSIONS

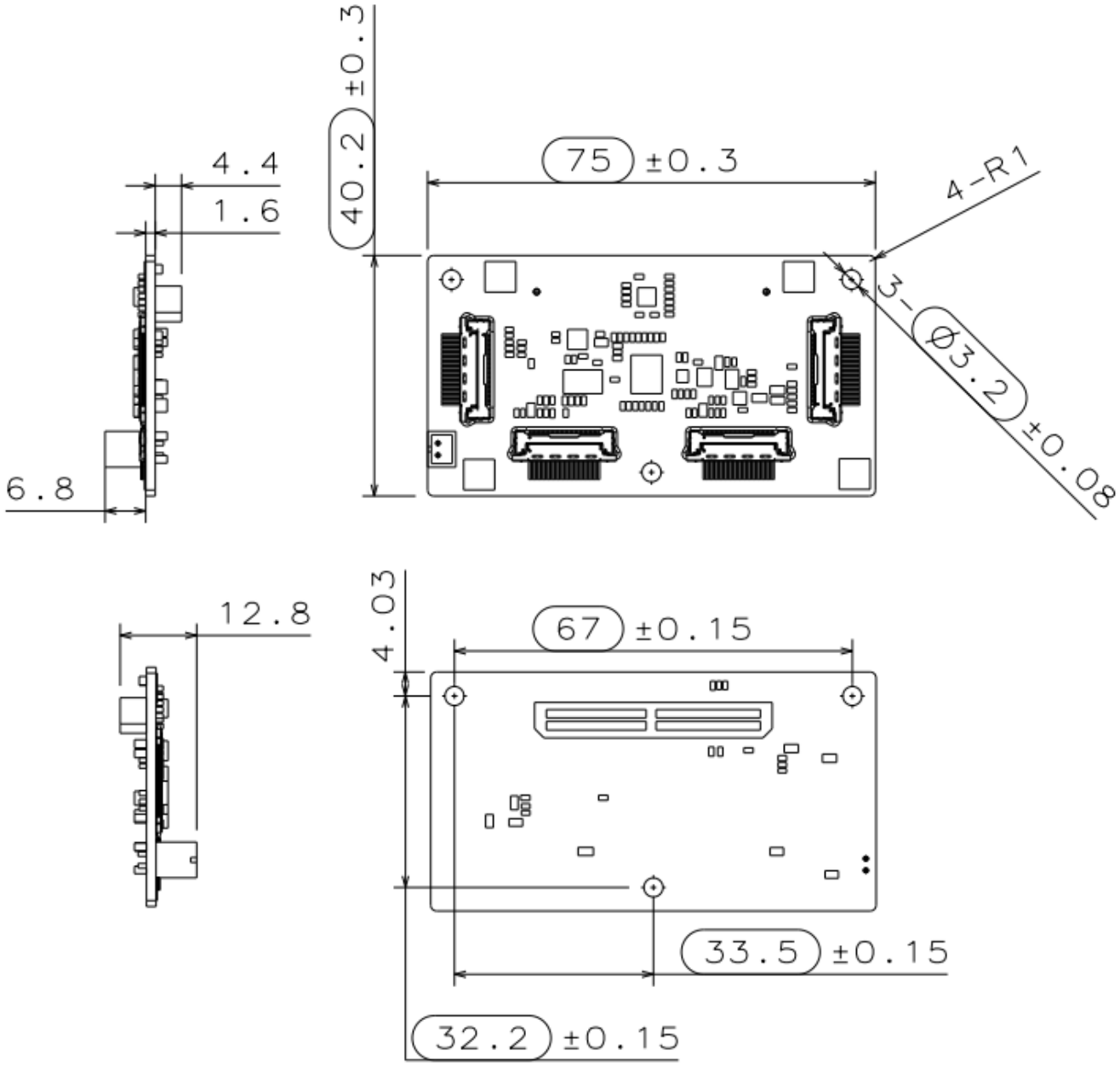

NOTE:

- ⬭ marked are important sizes.
- Tolerances for the unmarked are ± 0.3 mm.
- All materials are compliant with RoHS requirements.

Unit: mm

LI-JXAV-MIPI-ADPT-6CAM-FP

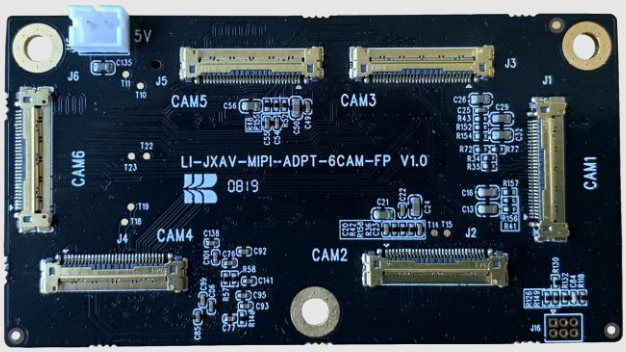

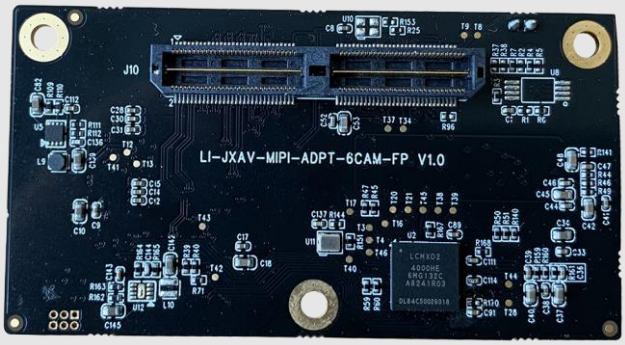

INTERFACES

Interface J1 (Camera Channel 1)

- Part#: 20525-030E-02
- Number of Positions: 30
- Pitch: 0.4 mm
- Mating I-PEX Cable: FAW-1233-XX

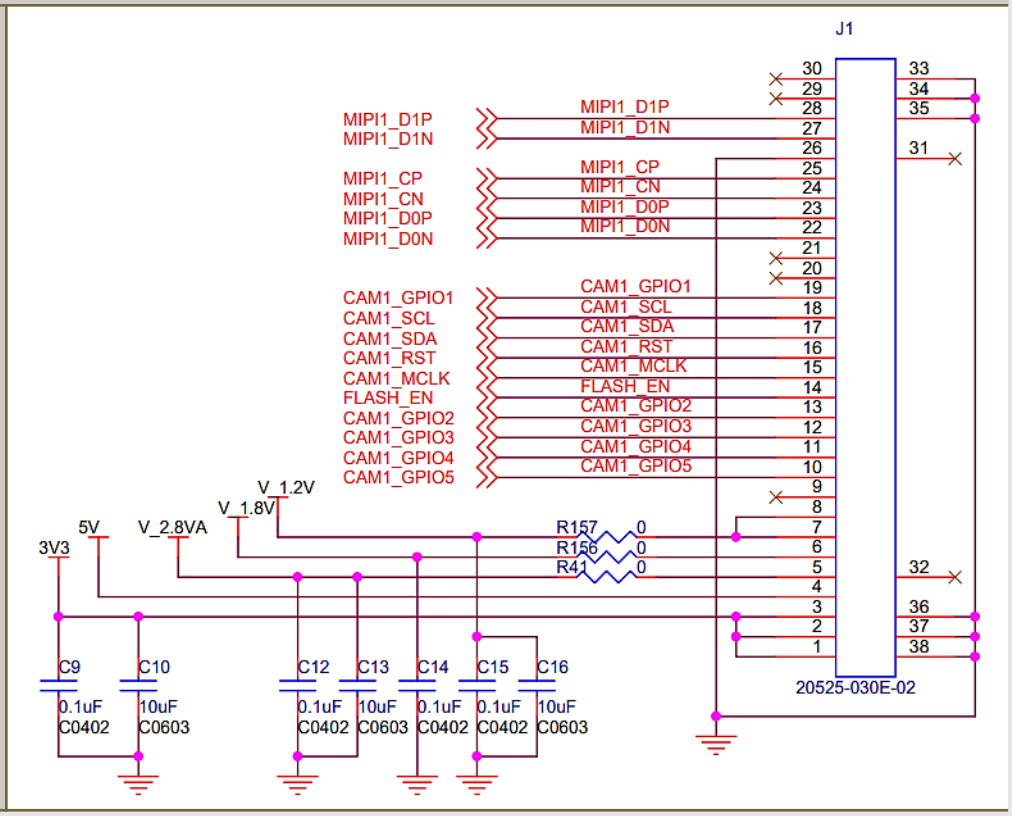

LI-JXAV-MIPI-ADPT-6CAM-FP

INTERFACES

Interface J2 (Camera Channel 2)

- Part#: 20525-030E-02
- Number of Positions: 30
- Pitch: 0.4 mm
- Mating I-PEX Cable: FAW-1233-XX

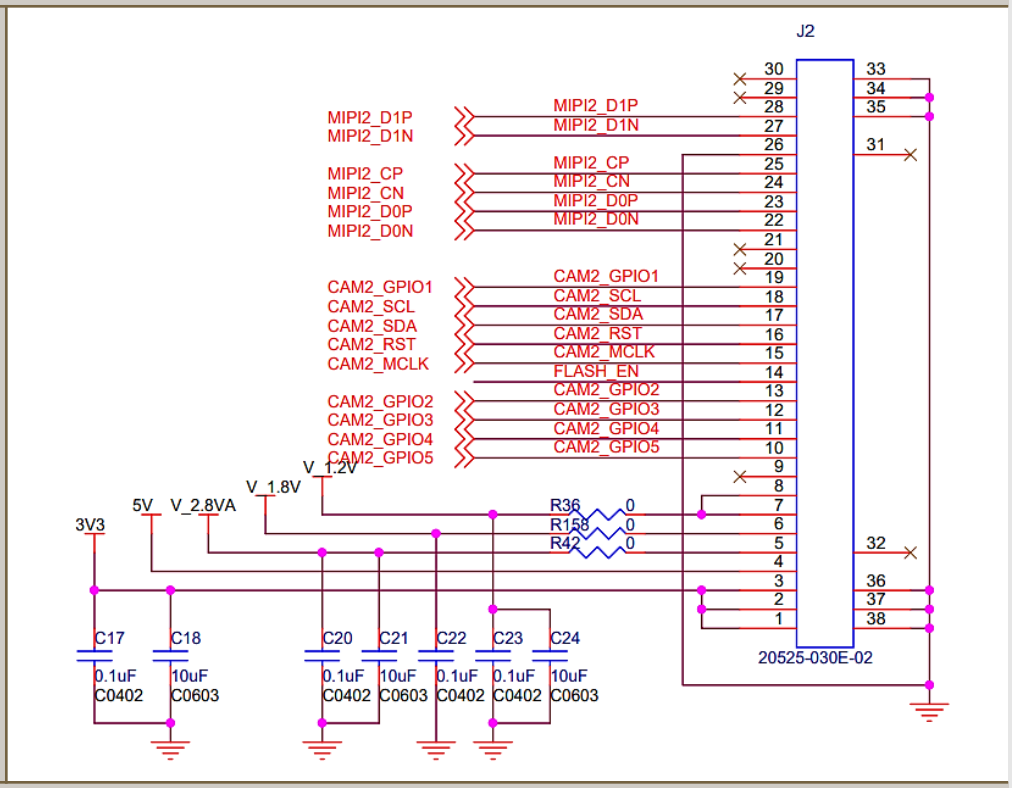

Interface J3 (Camera Channel 3)

- Part#: 20525-030E-02
- Number of Positions: 30
- Pitch: 0.4 mm
- Mating I-PEX Cable: FAW-1233-XX

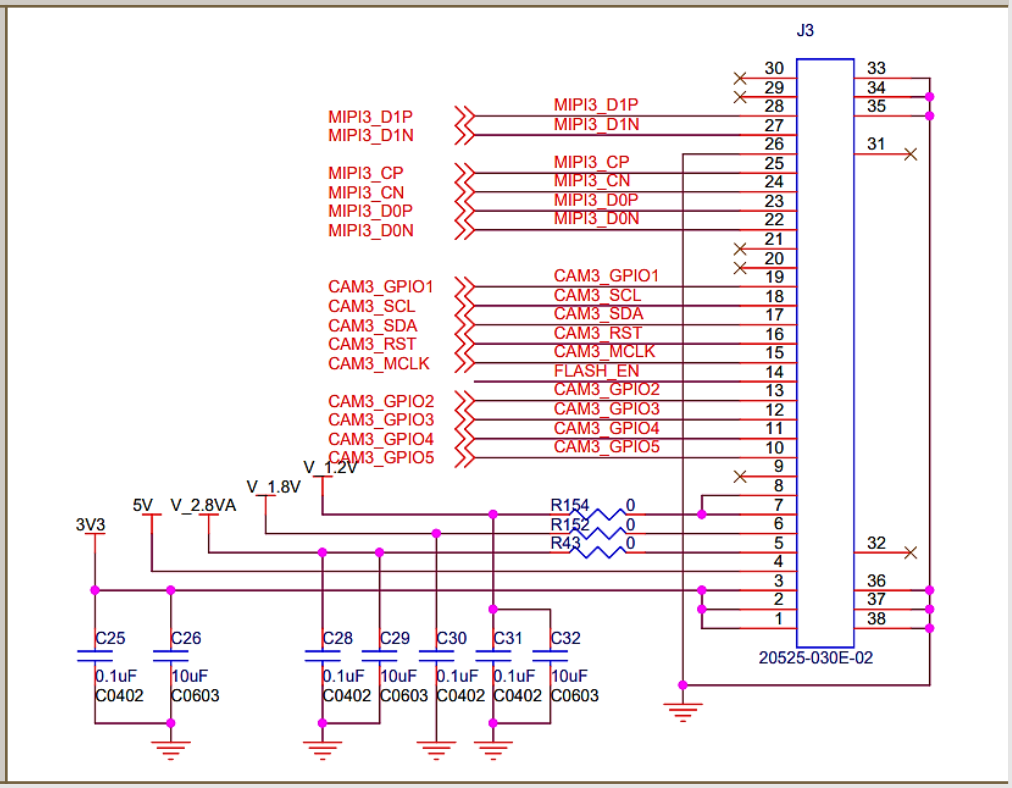

LI-JXAV-MIPI-ADPT-6CAM-FP

INTERFACES

Interface J4 (Camera Channel 4)

- Part#: 20525-030E-02
- Number of Positions: 30
- Pitch: 0.4 mm
- Mating I-PEX Cable: FAW-1233-XX

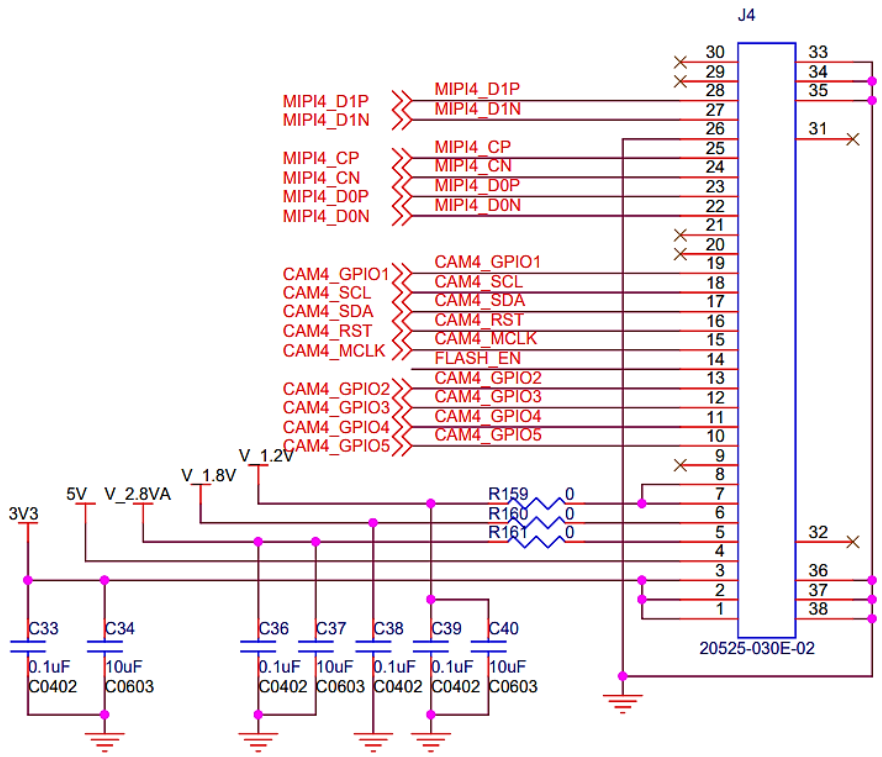

Interface J5 (Camera Channel 5)

- Part#: 20525-030E-02
- Number of Positions: 30
- Pitch: 0.4 mm
- Mating I-PEX Cable: FAW-1233-XX

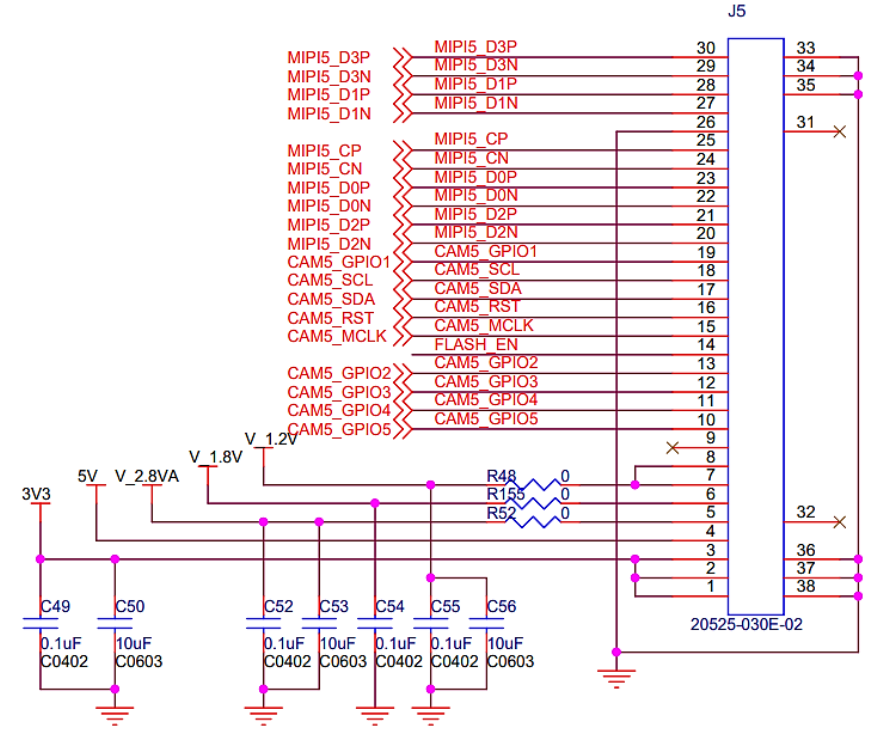

LI-JXAV-MIPI-ADPT-6CAM-FP

INTERFACES

Interface J6 (Camera Channel 6)

- Part#: 20525-030E-02
- Number of Positions: 30
- Pitch: 0.4 mm
- Mating I-PEX Cable: FAW-1233-XX

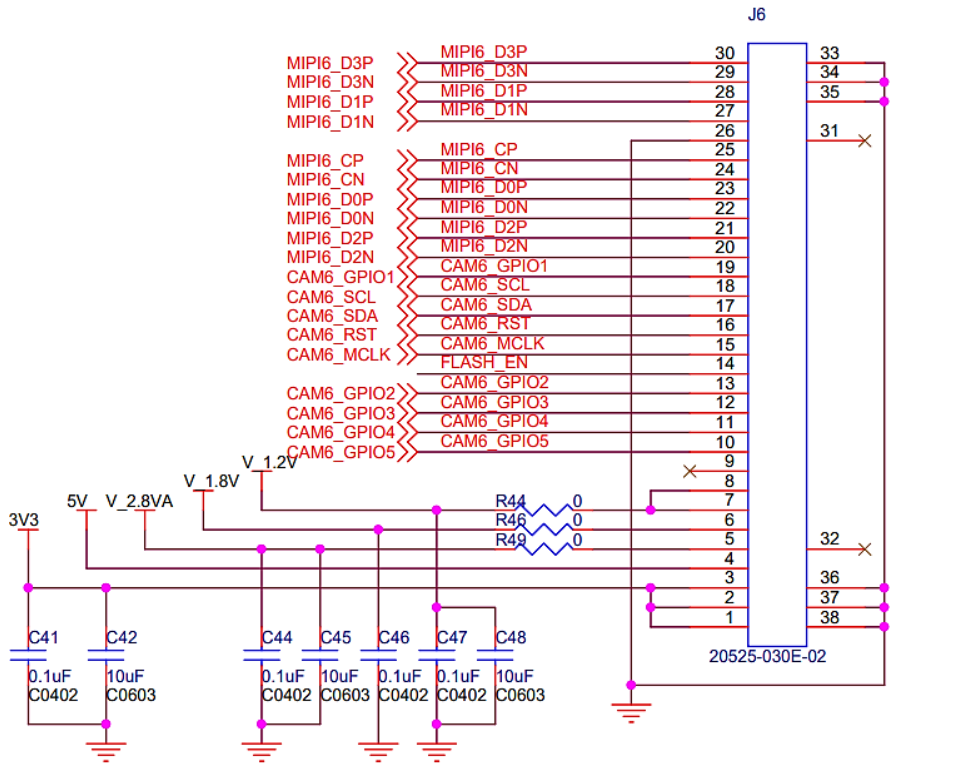

Interface J16 (FPGA Programming Interface, Not Populated)

- Part#: 20021311-00006T4LF
- Number of Positions: 6
- Pitch: 1.27mm
- Number of Rows: 2

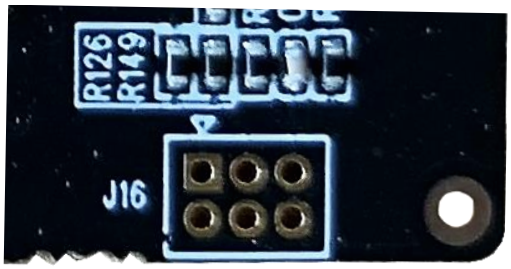

Pin	Definition
Pin 1	JTAG_TDO
Pin 2	JTAG_TMS
Pin 3	JTAG_TDI
Pin 4	JTAG_TCK
Pin 5	GND
Pin 6	GND

LI-JXAV-MIPI-ADPT-6CAM-FP

INTERFACES

Interface J15 (External 5V Input for IMX185 Sensor)	
■ Part#: 0894000220 ■ Number of Positions: 2 ■ Pitch: 2 mm	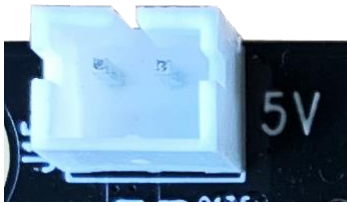

Interface J10 (To Xavier)	
■ Part#: QTH-060-01-L-D-A ■ Number of Positions: 120 ■ Number of Rows: 2 ■ Pitch: 0.5 mm	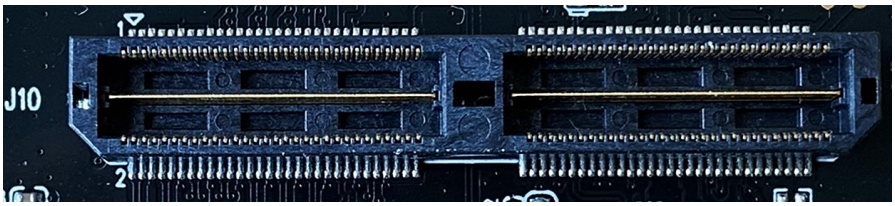

LI-JXAV-MIPI-ADPT-6CAM-FP

DIMENSIONS

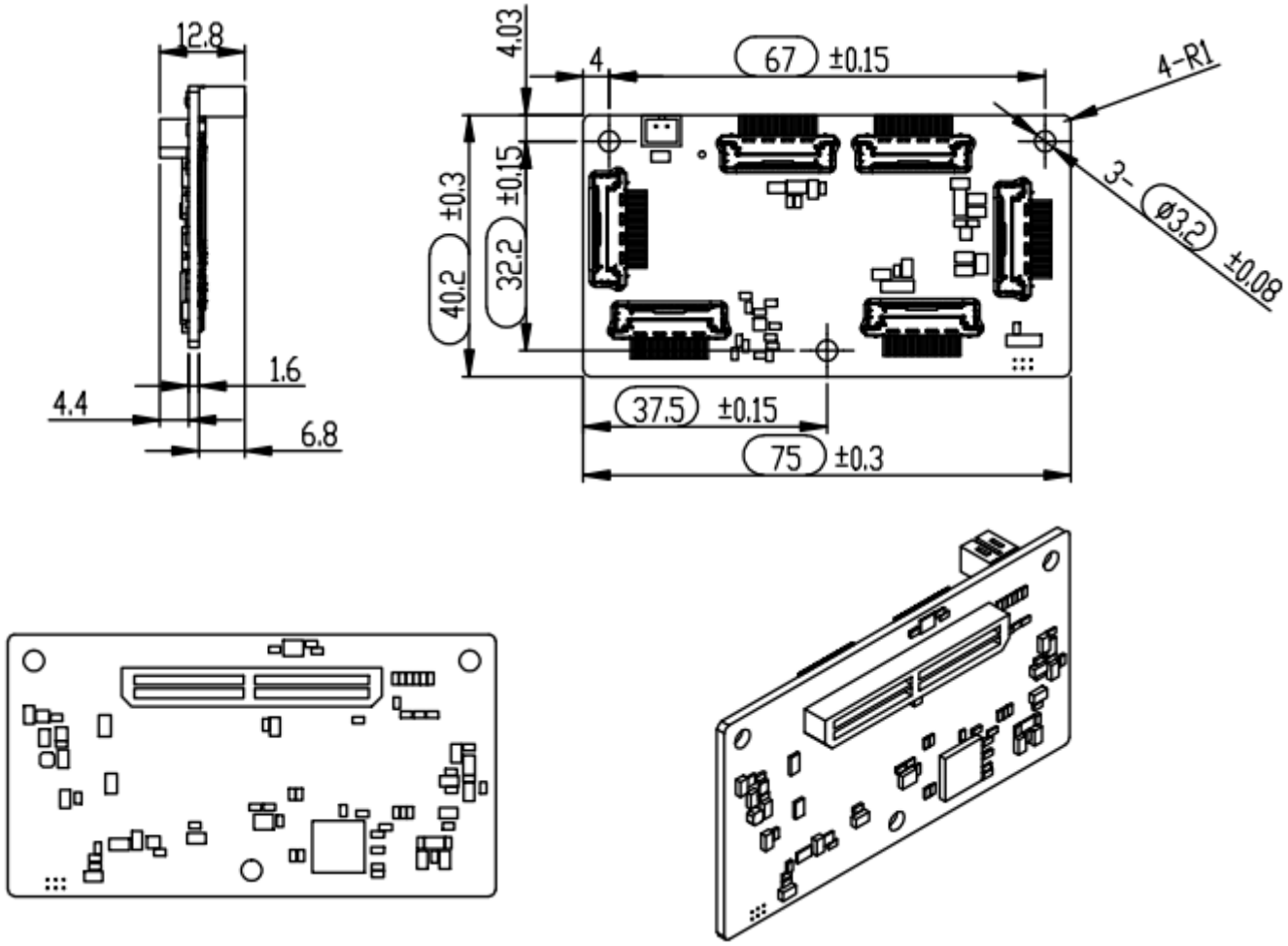

NOTE:

- ⬭ marked are important sizes.
- Tolerances for the unmarked are ± 0.3 mm.
- All materials are compliant with RoHS requirements.

Unit: mm

FAW-1233-03 Cable

MECHANICAL DIAGRAM

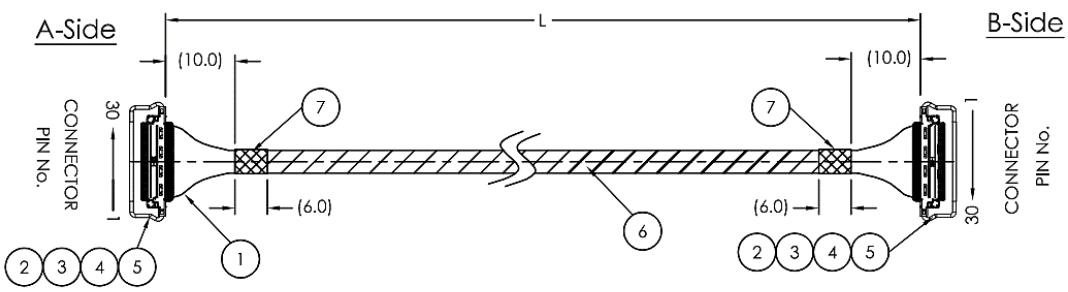

Fig. 1 Applying UV resin

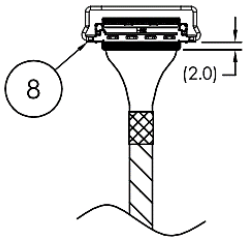

WIRING

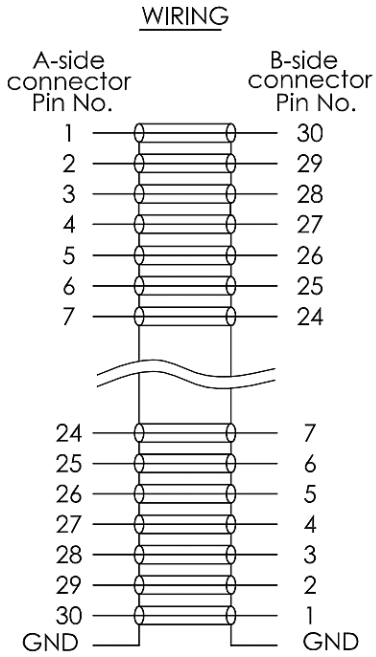

NOTE:

- Total length: 300.0 ± 10.0.

Unit: mm

LI-IMX185-MIPI-M12

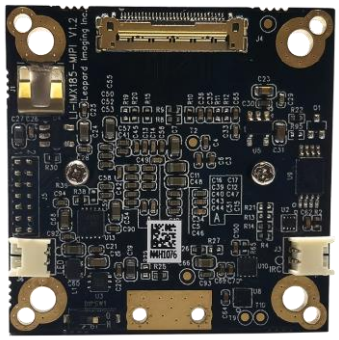

CAMERA SPECIFICATIONS

Sensor	Sony Diagonal 8.58 mm Type 1/1.9 CMOS Image Sensor IMX185LQJ
Optical Format	1/1.9"
Resolution	1937 (H) x 1217 (V) (active pixels)
Pixel Size	3.75 x 3.75 µm
Output Format	12-bit / 10-bit RAW data
Maximum Frame Rate	120 fps @ 1080p-HD
ISP	Not included
Color / Mono	Color sensor
Interface	4-lane MIPI CSI-2
Lens Mount	M12
Weight	~ 12 g
Part#	LI-IMX185-MIPI-M12

LI-IMX185-MIPI-M12

INTERFACES

Interface J4

- Connector Part#: 20525-030E-02
- Number of Positions: 30
- Pitch: 0.4 mm
- Mating I-PEX Cable: FAW-1233
- Sensor I2C Address: 0x1A (7-bit)
- External Power Supply: 3.3V, 5.0V
- 3V3, 1V8, 1V2 are generated from board.

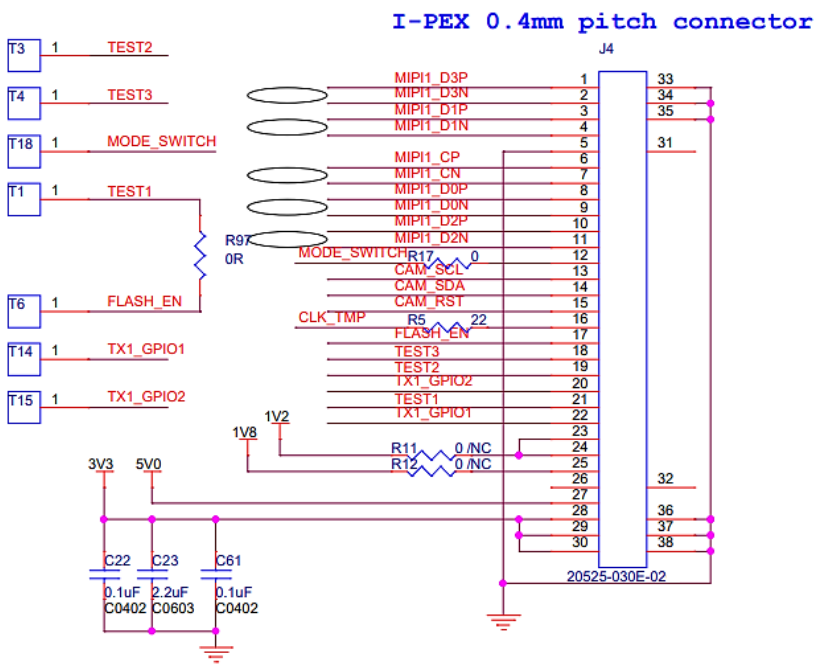

Interface J3 & J6

Interfaces	Description
J3 for IR-Cut switcher (**Not** Used in Default)	■ Part#: 1734829-2 ■ Number of Positions: 2 ■ Pitch: 1.25 mm
J6 for Flash_EN (**Not** Used in Default)	■ Part#: 1734829-2 ■ Number of Positions: 2 ■ Pitch: 1.25 mm

LI-IMX185-MIPI-M12

INTERFACES

Interface J5 (14-Pin Header to Lens Control Board)

- Part#:20021111-00014T4LF
- Number of Positions: 14
- Pitch: 1.27 mm

Pin	Definition
Pin 1, 3, 8, 13, 14	GND
Pin 2, 4	3V3
Pin 5	TX1_GPIO1
Pin 6	1V8
Pin 7	TEST1
Pin 9	TEST2
Pin 10	CAM_SCL_3V3
Pin 11	TEST3
Pin 12	CAM_SDA_3V3

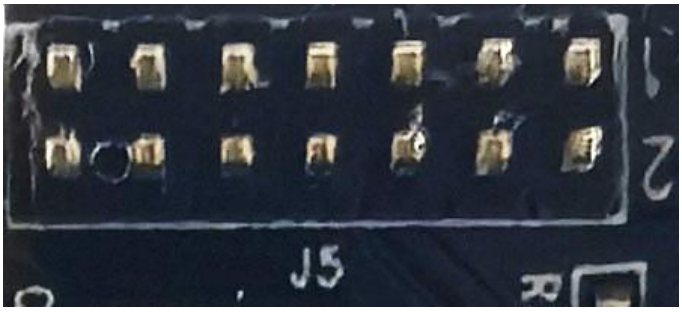

DIP Switch for Mode Selection

- Two modes: Master (default) and Slave.

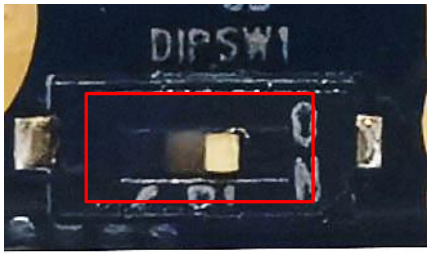

Master mode by default

LI-IMX185-MIPI-M12

DIMENSIONS

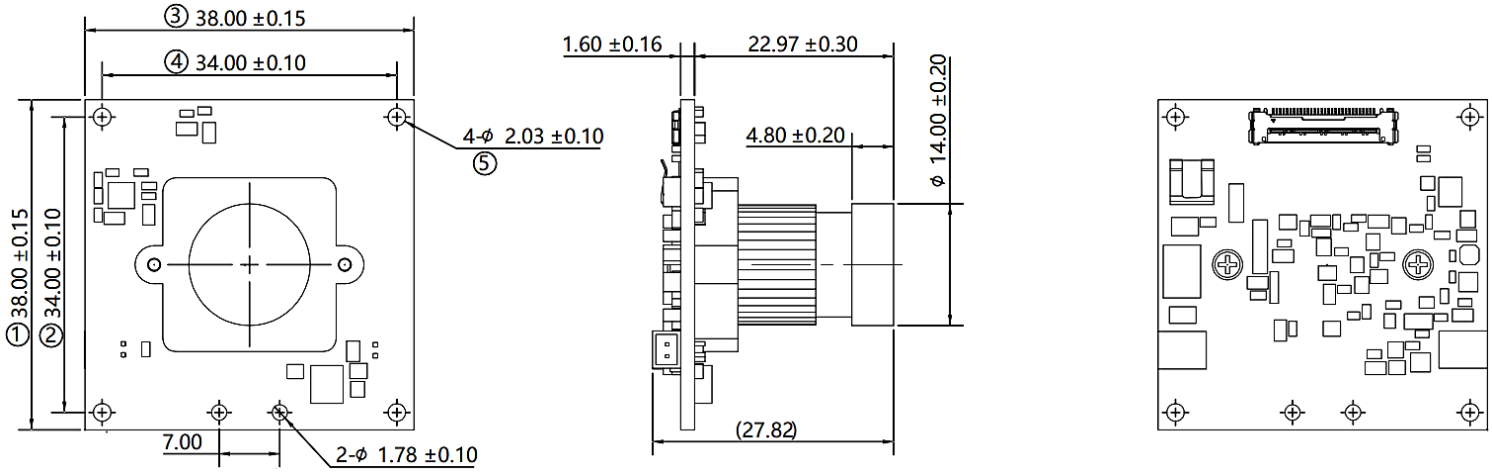

TOLERANCE TABLE					
LENGTH TOLERANCE		CHAMFER TOLERANCE		ANGLE TOLERANCE	
Size X	Tolerance	Size X	Tolerance	Size X	Tolerance
0.5 < X≤3	±0.1	0.5 < X≤3	±0.2	X≤10	±1°
3 < X≤6	±0.1	3 < X≤6	±0.5	10 < X≤50	±30'
6 < X≤30	±0.2	6 < X≤30	±1	50 < X≤120	±20'
30 < X≤120	±0.3	X > 30	±2	120 < X≤400	±10'
120 < X≤400	±0.5			X > 400	±5'
400 < X≤1000	±0.8				
X > 1000	±1.2				

NOTE:

- ⊗ marked are important sizes.
- Tolerances for the unmarked – refer to the Tolerance table.
- All materials are compliant with RoHS & REACH requirements.

Unit: mm

REVISION HISTORY

Revision	Description	Release Date
1.0	First release.	23 Mar 2019
1.1	Added 6 camera adapter board.	25 Jun 2019
1.2	Deleted info quoted from sensor spec.	21 May 2019
1.3	Deleted lens model info.	16 Dec 2021
1.4	1. Updated lens info and related pics, 2D, and weight. 2. Updated interfaces for adapt board.	14 Dec 2023

910 Auburn Ct, Fremont, CA 94538, USA
Phone: +1-408-263-0988
Fax: +1-408-217-1960
Email: sales@leopardimaging.com
Website: www.leopardimaging.com

Leopard Imaging Inc.