LI-JETSON-CB-IMX274M12-X

Address:
910 Auburn Ct
Fremont, CA 94538
USA

Phone:
+1 (408)263-0988
Fax:
+1 (408)217-1960

Sales:
sales@leopardimaging.com
Support:
support@leopardimaging.com

KEY FEATURES

- Compatible with Nvidia® Jetson™ TX1 / TX2 (TX1 / TX2 SOM not included)
- MIPI CSI-2 interface
- Supports up to six cameras
- Two carrier board options:

LI-TX1-CB	Includes three 4-lane interfaces Support 4K @ 60 fps
LI-TX1-CB-6CAM	Includes six 2-lane interfaces Support 4K @ 30 fps

- Sensor: Sony Diagonal 7.20 mm (Type 1/2.5) CMOS image sensor IMX274
- Active pixels: 3864 (H) x 2196 (V)
- Pixel size: 1.62 x 1.62 µm
- Color camera
- I-PEX cable part#: FAW-1233-03
- Length of the I-PEX cable: 300 mm
- Supports multiple length cables
- MIPI connector part#: 20525-030E-02
- Supports M12 lens
- Allows customization
- Part#:

1 Cam	LI-JETSON-CB-IMX274M12
2 Cam	LI-JETSON-CB-IMX274M12-D
3 Cam	LI-JETSON-CB-IMX274M12-T
6 Cam	LI-JETSON-CB-IMX274M12-H

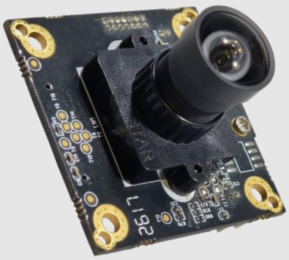

LENS SPECIFICATIONS

Effective Focal Length	3.25 mm ± 5%
Aperture, F/#	2.60 ± 5%
Field of View (FOV)	87.9˚ horizontal
	96.1˚ diagonal
	56.2˚ vertical
TV Distortion	< -0.55%
Relative Illumination	> 66.15%
IR Filter	650 nm IR cut filter
Lens Mount	M12 x P0.5

BOM

#	Items	QTY
1	LI-TX1-CB or LI-TX1-CB-6CAM	1
2	LI-IMX274-MIPI-M12	1, 2, 3 or 6
3	FAW-1233-03 cable	1, 2, 3 or 6
4	DC 12V power supply	1
5	USB 2.0 Type A - Micro B cable	1

NOTE:
Nvidia TX1/TX2 SOM is **NOT** included.

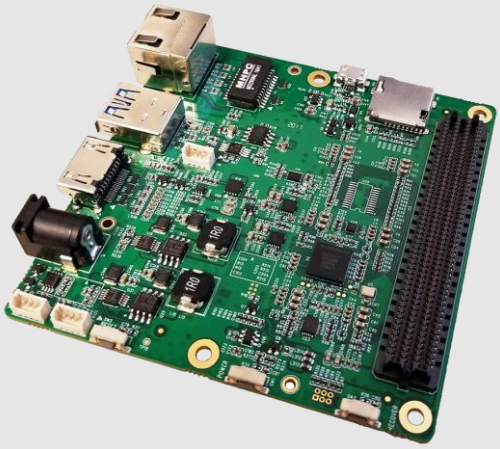

BOM DETAILS

LI-JETSON-CB-IMX274M12

#	Items	QTY
1	LI-TX1-CB	1
2	LI-IMX274-MIPI-M12	1
3	FAW-1233-03 cable	1
4	DC 12V power supply	1
5	USB 2.0 Type A - Micro B cable	1

LI-JETSON-CB-IMX274M12-D

#	Items	QTY
1	LI-TX1-CB	1
2	LI-IMX274-MIPI-M12	2
3	FAW-1233-03 cable	2
4	DC 12V power supply	1
5	USB 2.0 Type A - Micro B cable	1

LI-JETSON-CB-IMX274M12-T

#	Items	QTY
1	LI-TX1-CB	1
2	LI-IMX274-MIPI-M12	3
3	FAW-1233-03 cable	3
4	DC 12V power supply	1
5	USB 2.0 Type A - Micro B cable	1

LI-JETSON-CB-IMX274M12-H

#	Items	QTY
1	LI-TX1-CB-6CAM	1
2	LI-IMX274-MIPI-M12	6
3	FAW-1233-03 cable	6
4	DC 12V power supply	1
5	USB 2.0 Type A - Micro B cable	1

LI-TX1-CB

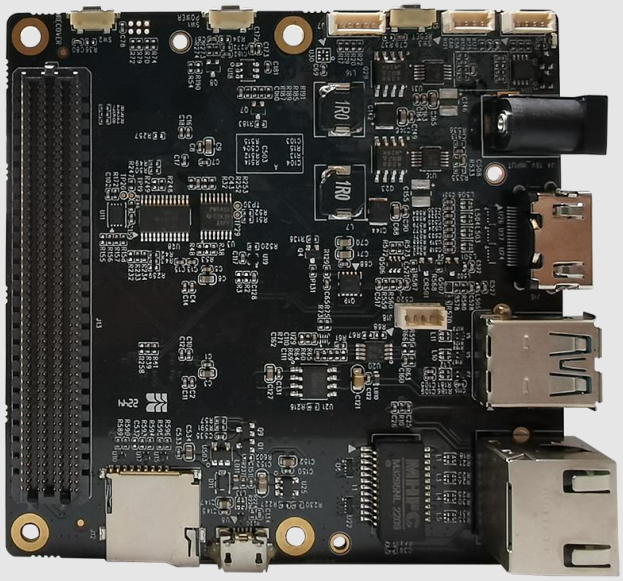

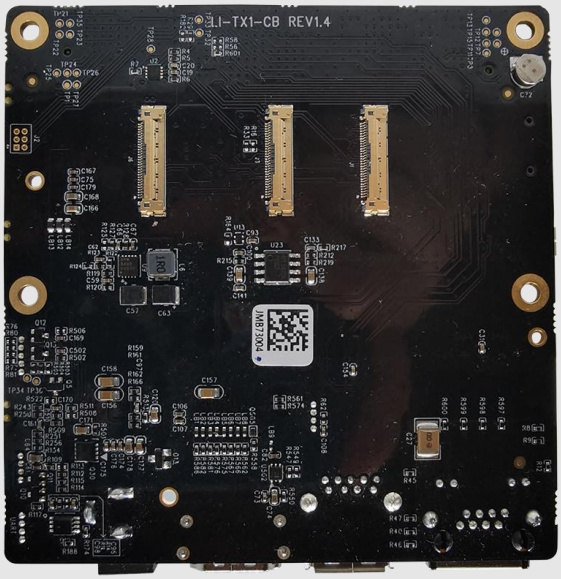

CAMERA INTERFACES

Interface J1

- Part#: 20525-030E-02
- Number of Positions: 30
- Pitch: 0.4 mm
- Mating I-PEX cable: FAW-1233-03 (300 mm)

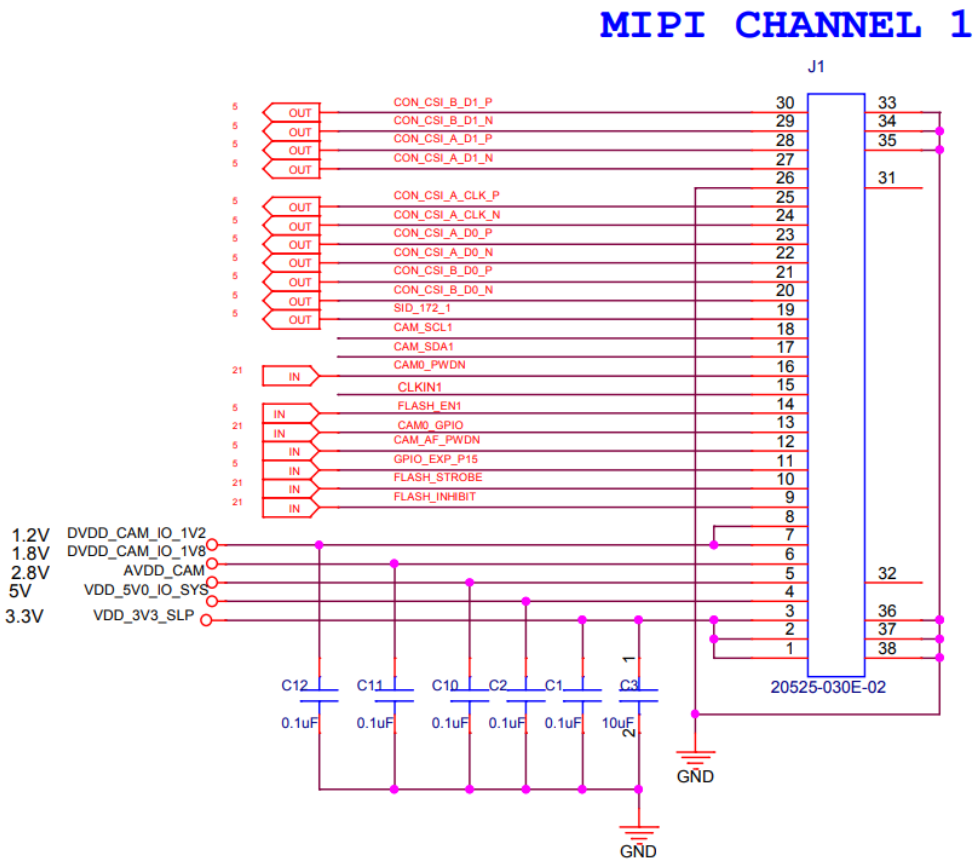

LI-TX1-CB

CAMERA INTERFACES

Interface J3

- Part#: 20525-030E-02
- Number of Positions: 30
- Pitch: 0.4 mm
- Mating I-PEX Cable: FAW-1233-03 (300 mm)

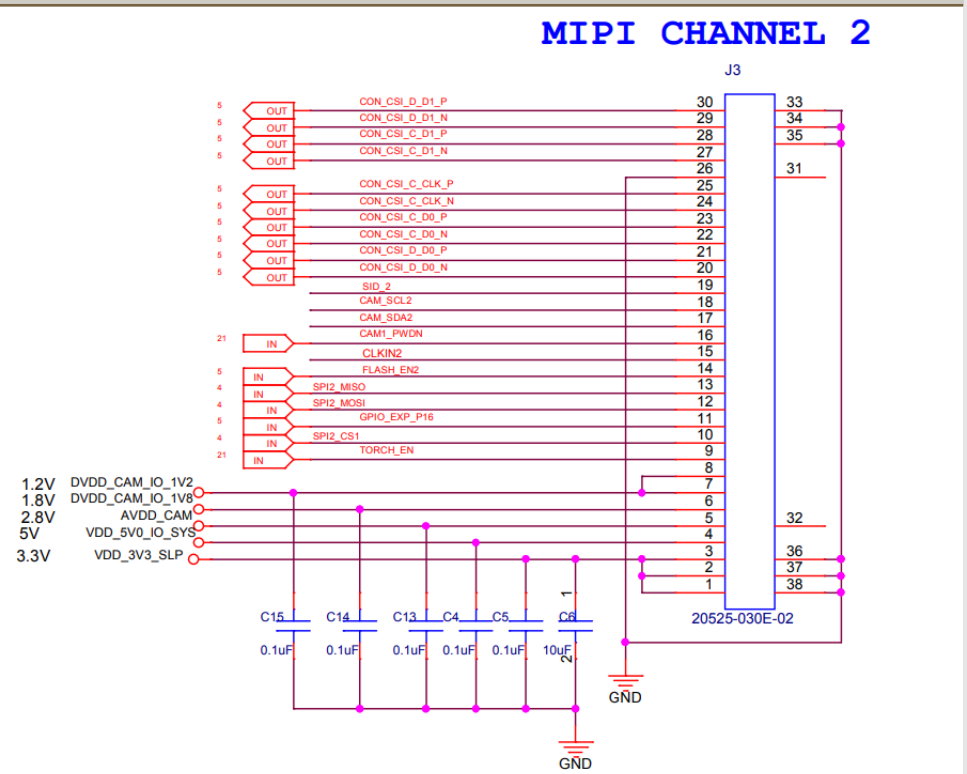

Interface J6

- Part#: 20525-030E-02
- Number of Positions: 30
- Pitch: 0.4 mm
- Mating I-PEX Cable: FAW-1233-03 (300 mm)

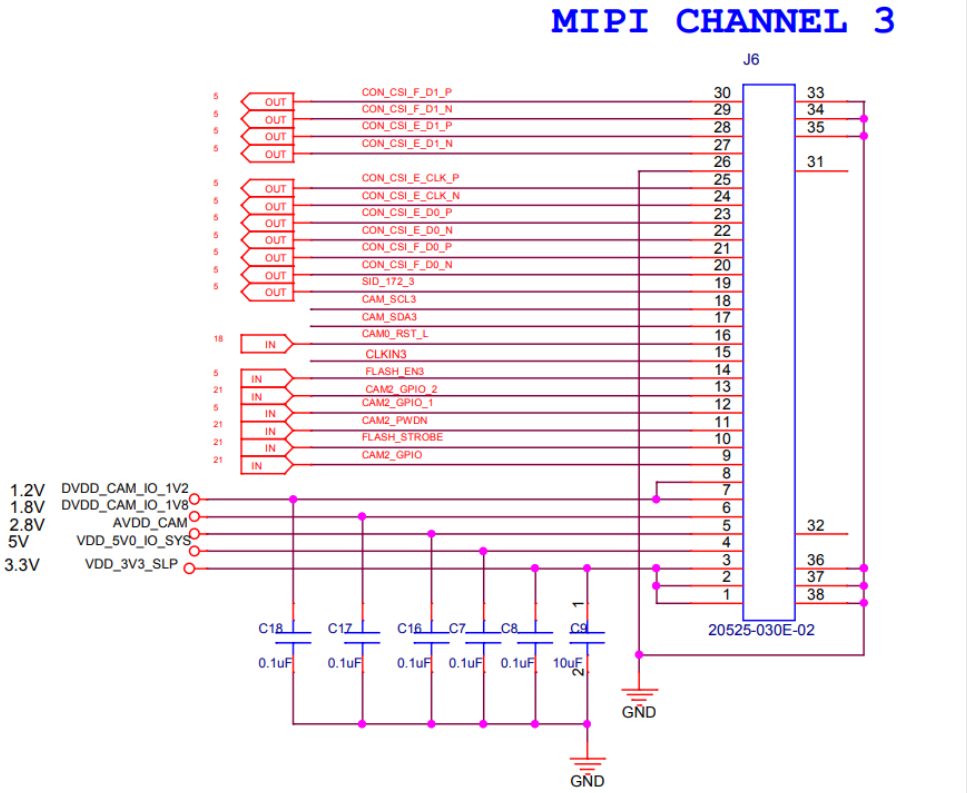

LI-TX1-CB

DIMENSIONS

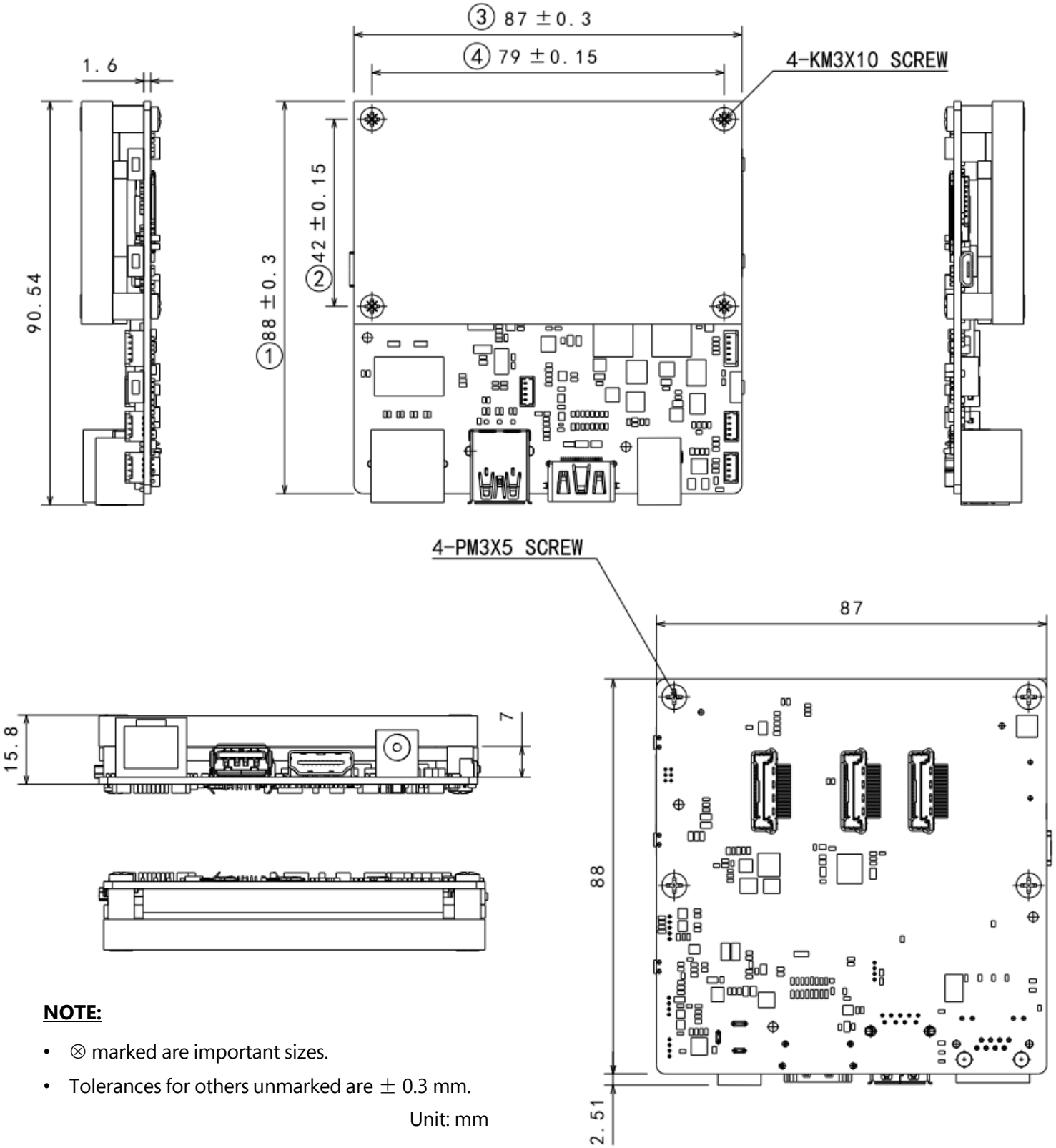

NOTE:

- ⊗ marked are important sizes.
- Tolerances for others unmarked are ± 0.3 mm.

Unit: mm

LI-TX1-CB-6CAM

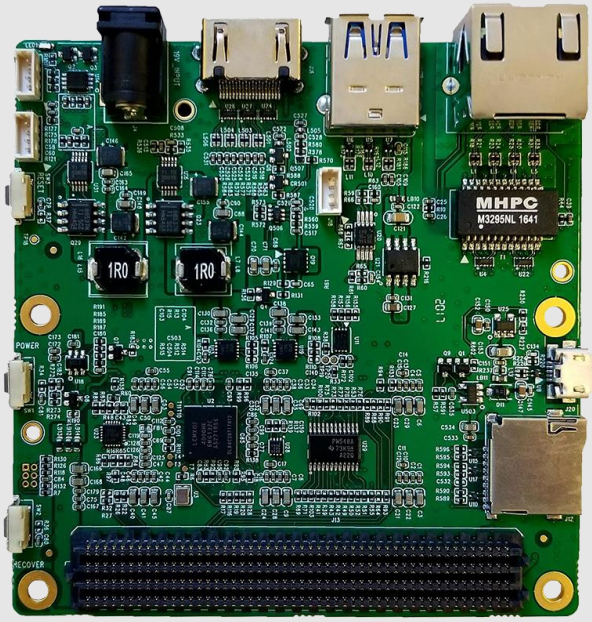

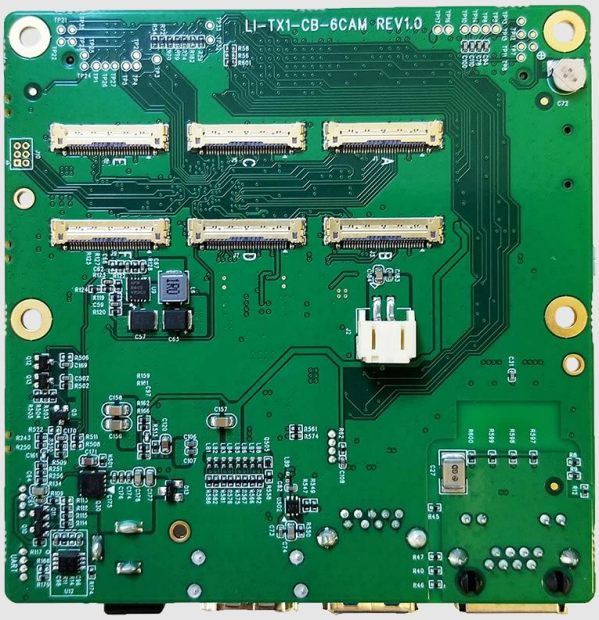

CAMERA INTERFACES

Interface J1 (Camera Channel A)

- Part#: 20525-030E-02
- Number of Positions: 30
- Pitch: 0.4 mm
- Mating I-PEX cable: FAW-1233-03 (300 mm)

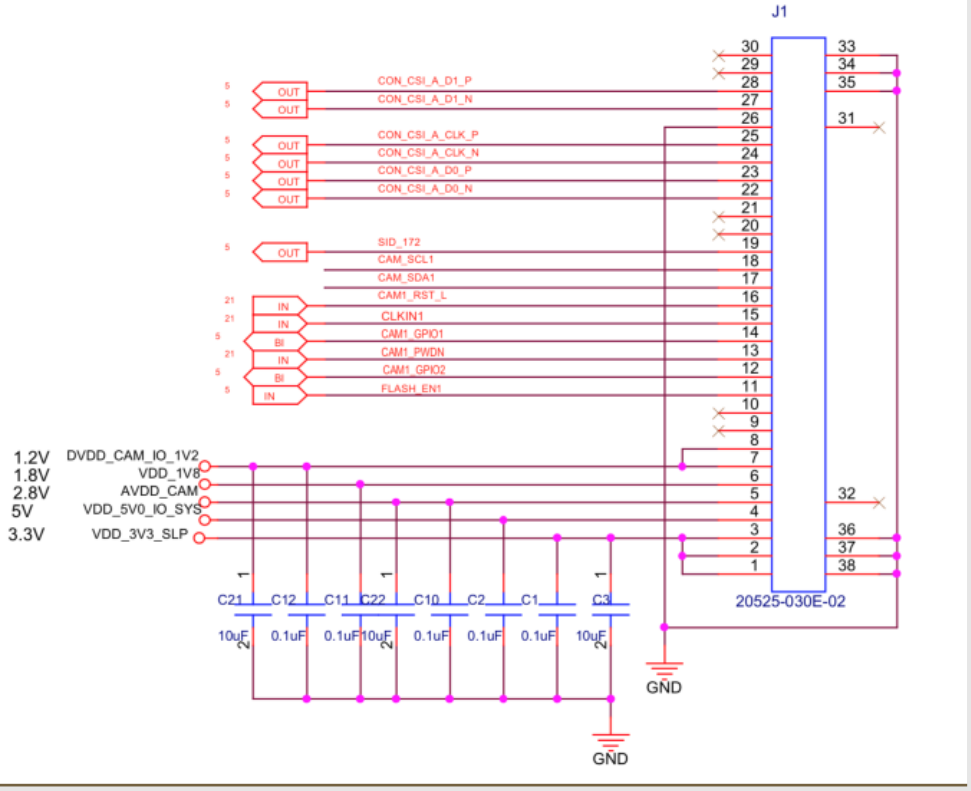

LI-TX1-CB-6CAM

CAMERA INTERFACES

Interface J3 (Camera Channel B)

- Part#: 20525-030E-02
- Number of Positions: 30
- Pitch: 0.4 mm
- Mating I-PEX Cable: FAW-1233-03 (300 mm)

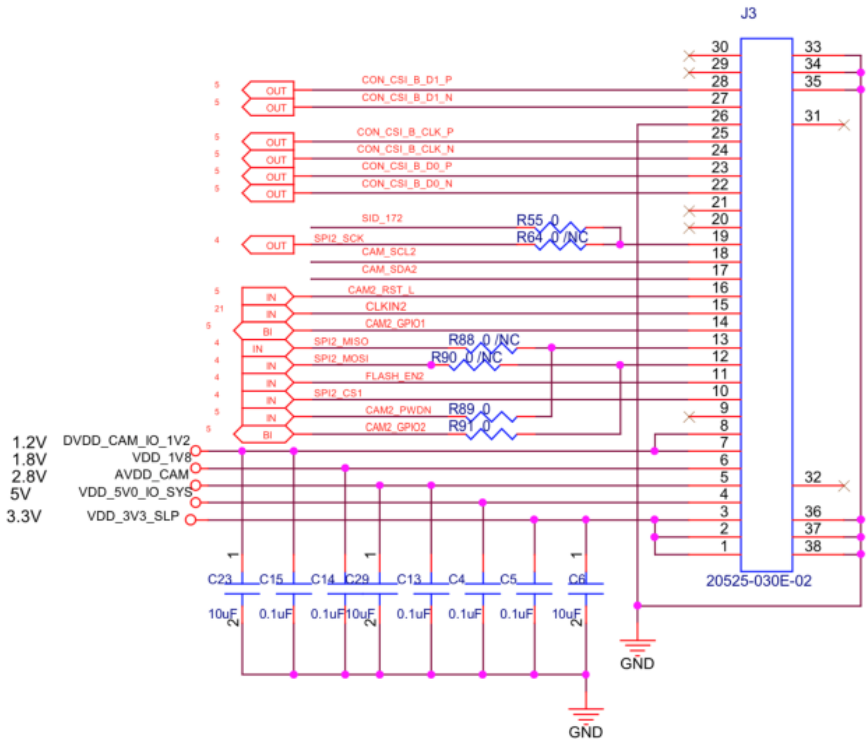

Interface J6 (Camera Channel C)

- Part#: 20525-030E-02
- Number of Positions: 30
- Pitch: 0.4 mm
- Mating I-PEX Cable: FAW-1233-03 (300 mm)

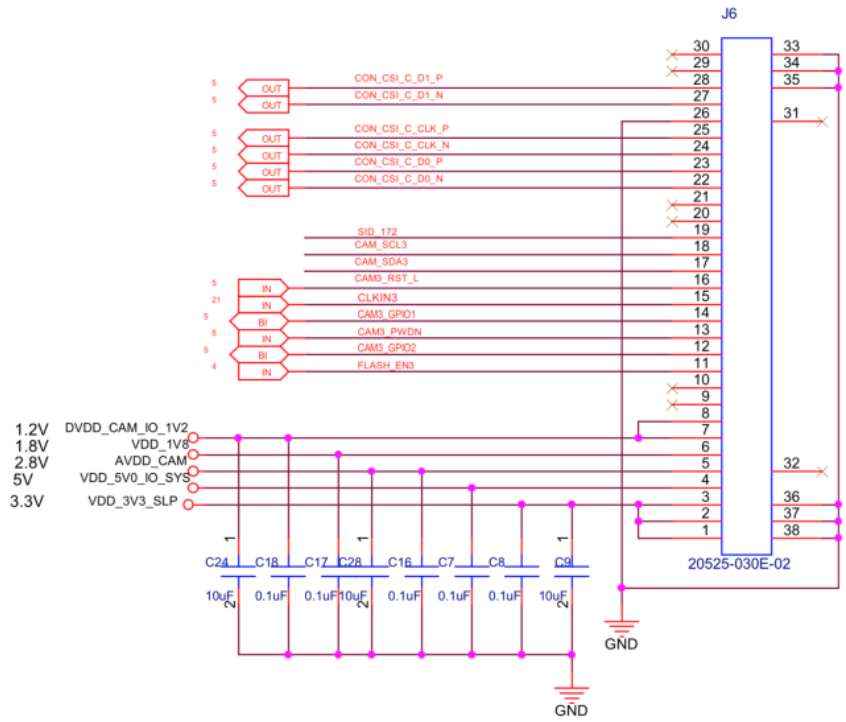

LI-TX1-CB-6CAM

CAMERA INTERFACES

Interface J7 (Camera Channel D)

- Part#: 20525-030E-02
- Number of Positions: 30
- Pitch: 0.4 mm
- Mating I-PEX Cable: FAW-1233-03 (300 mm)

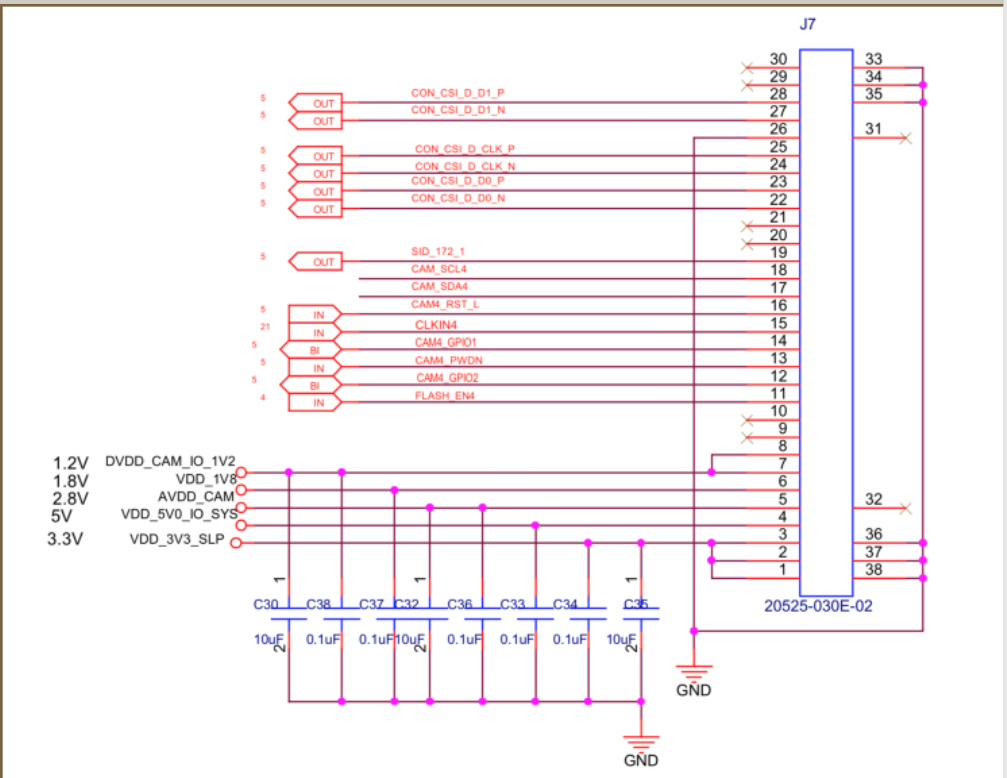

Interface J8 (Camera Channel E)

- Part#: 20525-030E-02
- Number of Positions: 30
- Pitch: 0.4 mm
- Mating I-PEX Cable: FAW-1233-03 (300 mm)

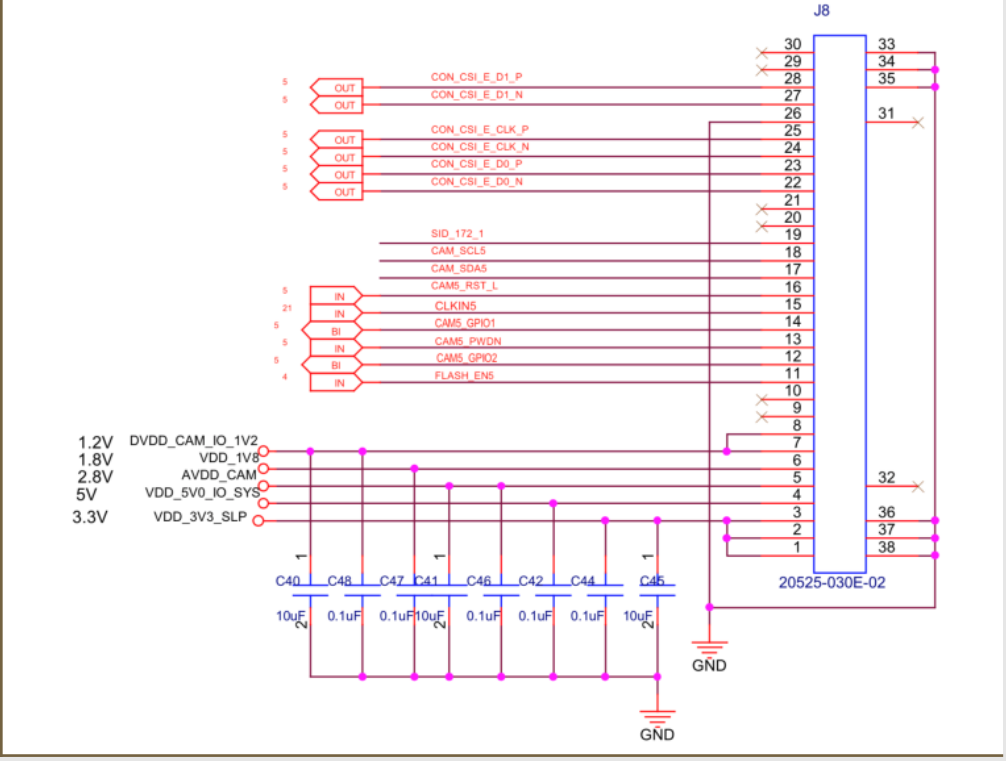

LI-TX1-CB-6CAM

CAMERA INTERFACES

Interface J9 (Camera Channel F)

- Part#: 20525-030E-02
- Number of Positions: 30
- Pitch: 0.4 mm
- Mating I-PEX Cable: FAW-1233-03 (300 mm)

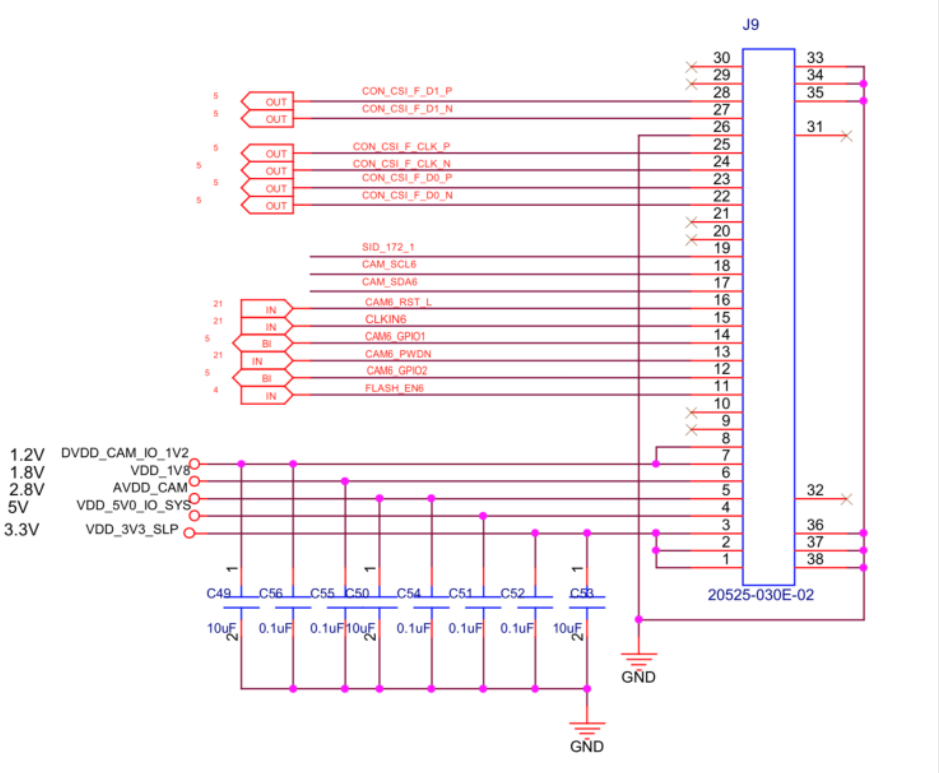

LI-TX1-CB-6CAM

DIMENSIONS

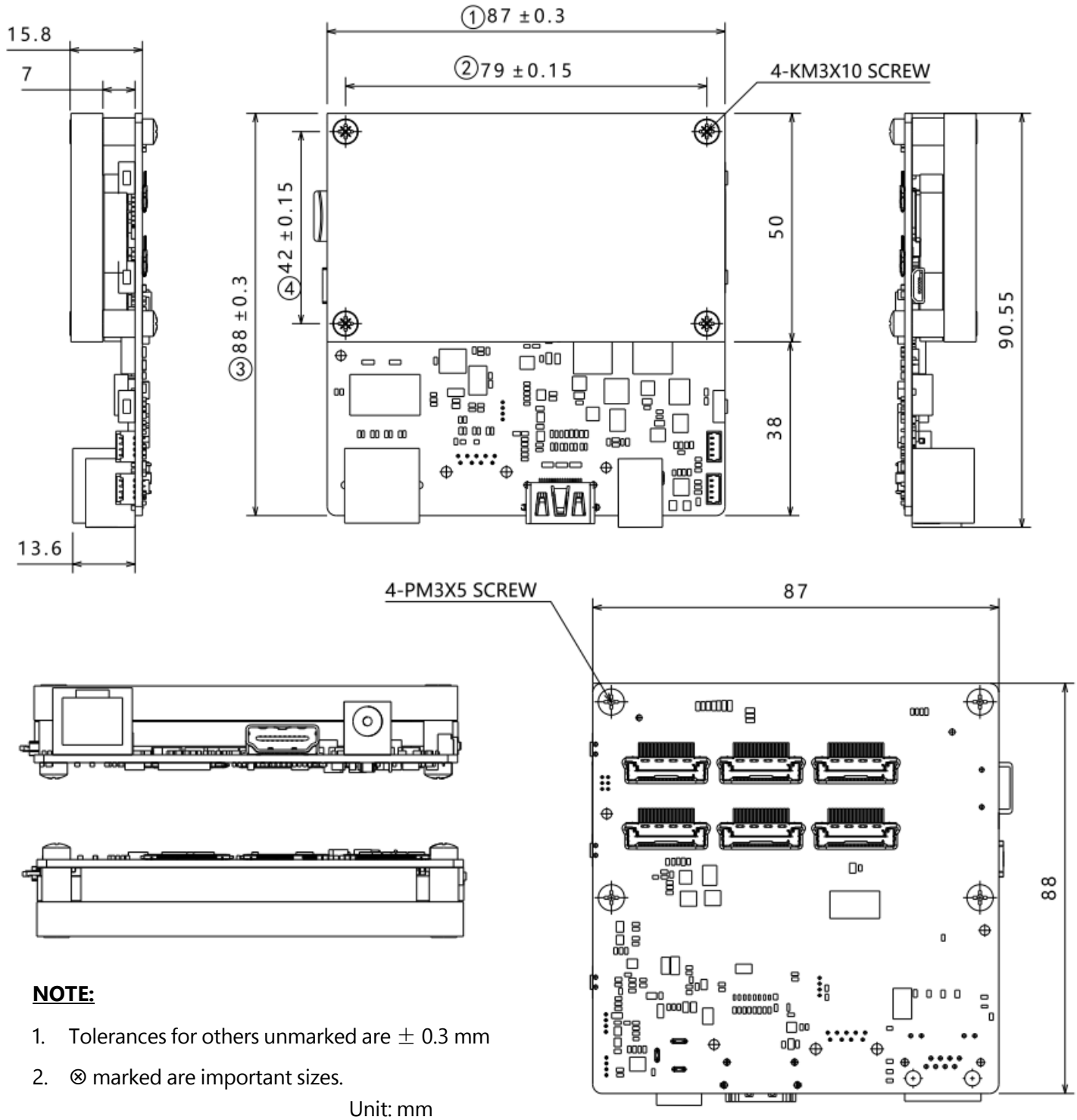

NOTE:

1. Tolerances for others unmarked are ± 0.3 mm
2. ⊗ marked are important sizes.

Unit: mm

FAW-1233-03 Cable

MECHANICAL DIAGRAM

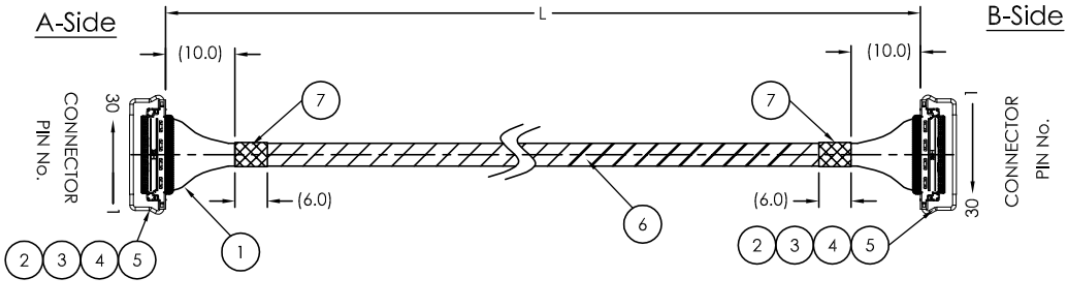

Fig. 1 Applying UV resin

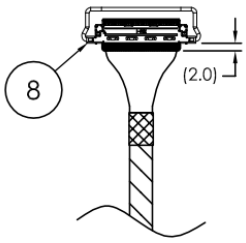

WIRING

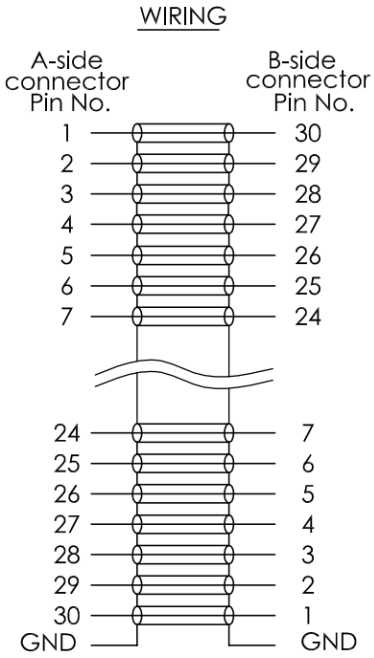

8	UV RESIN	2	LOCBOND P/N : LOCBOND 349
7	TAPE	2	CHUKOH P/N: ASF-116T
6	TAPE	1	CHUKOH P/N: SEF-110
5	FLAT COPPER WIRE	4	GROUND BAR
4	PULL BAR	2	I-PEX P/N : 2766-0301
3	SHIELD PLATE	2	I-PEX P/N : 2764-0301-002
2	CONNECTOR	2	I-PEX P/N : 20634-130T-02
1	CABLE	30	UL10231 AWG40 MCX (Z=50ohm)
ITEM	DESCRIPTION	Q'TY	REMARK

NOTE:

- Total length: 300.0 ± 10.0.
- Apply UV resin at the end of connector to cover cables both sides of the cable assembly (Fig.1).

Unit: mm

LI-IMX274-MIPI-M12

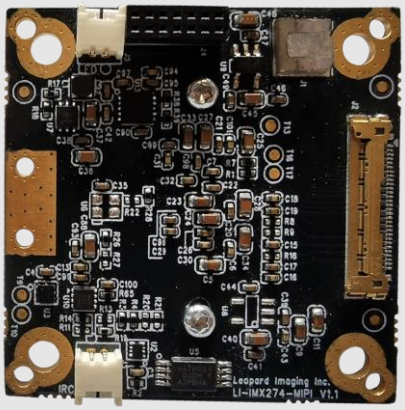

CAMERA SPECIFICATIONS

Sensor	Sony Diagonal 7.20 mm (Type 1/2.5) CMOS Image Sensor IMX274
Optical Format	1/2.5"
Resolution	3864 (H) x 2196 (V) (active pixels)
Pixel Size	1.62 x 1.62 µm
Output Format	10-bit / 12-bit RAW data
Maximum Frame Rate	60 fps @ 3840 x 2160
ISP	Not included
Color / Mono	Color sensor
Interface	4-lane MIPI CSI-2
Operating Temp	-20℃ ~ +75℃
Storage Temp	-20℃ ~ +75℃
Weight	~ 14 g
Part#	LI-IMX274-MIPI-M12

LI-IMX274-MIPI-M12

INTERFACES

Interface J2

- Part#: 20525-030E-02
- Number of Positions: 30
- Pitch: 0.4 mm
- Mating I-PEX Cable: LI-FAW-1233
- Sensor SLAVE address: 0x1A (7-bit)
- External power supply: 3.3V
- 1.8V is generated from sensor board
- 5.0V is not used since it's for IR cut switch function only

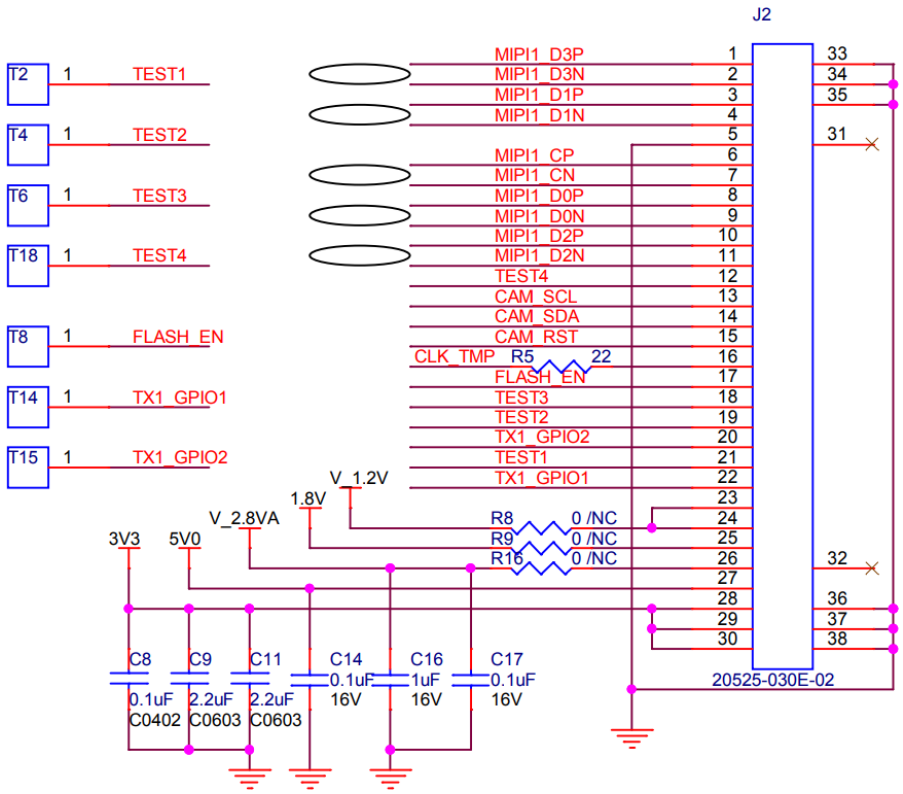

Interface J3

- Connector Part#: 1734829-2
- Number of Positions: 2
- Pitch: 1.25 mm

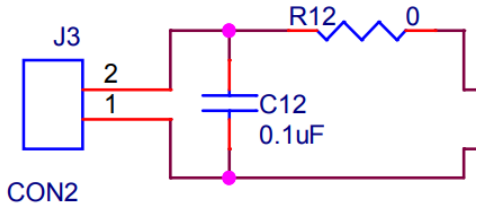

Interface J5

- Connector Part#: 1734829-2
- Number of Positions: 2
- Pitch: 1.25 mm

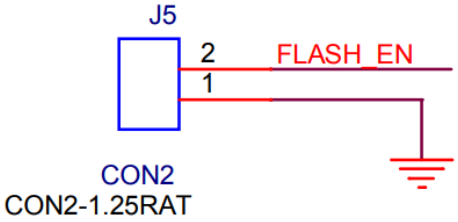

LI-IMX274-MIPI-M12

DIMENSIONS

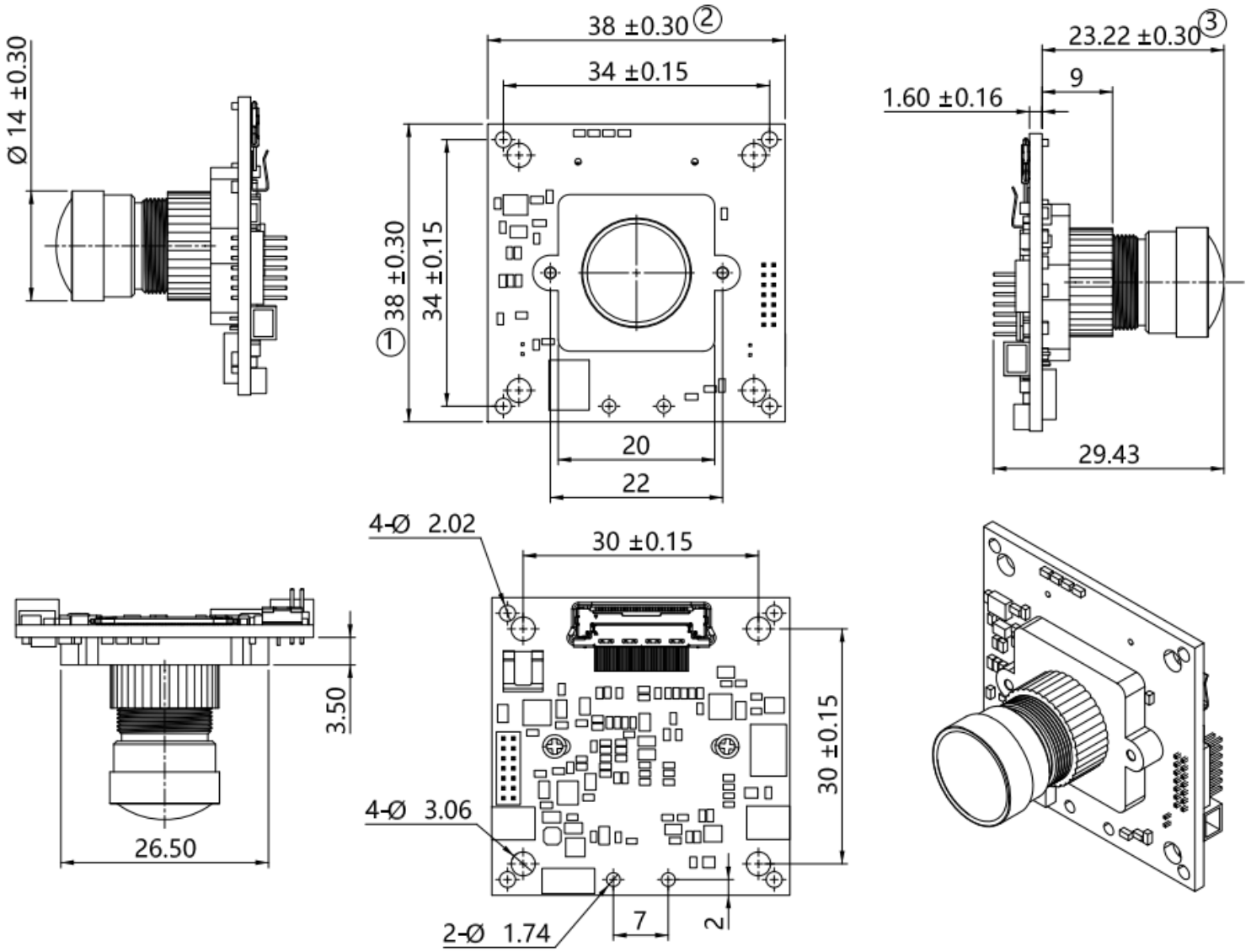

NOTE:

- ⊗ marked are important sizes.
- Tolerances for others unmarked are ± 0.3 mm.

Unit: mm

REVISION HISTORY

Revision	Description	Release Date
1.0	First release.	01 Jan 2020
1.1	Deleted info quoted from sensor spec.	23 May 2022
1.2	Updated lens information as well as related product images and 2D dimensions.	10 Oct 2022

910 Auburn Ct, Fremont, CA 94538, USA
Phone: +1-408-263-0988
Fax: +1-408-217-1960
Email: sales@leopardimaging.com
Website: www.leopardimaging.com

Leopard Imaging Inc.