LI-JETSON-CB-IMX185M12-X

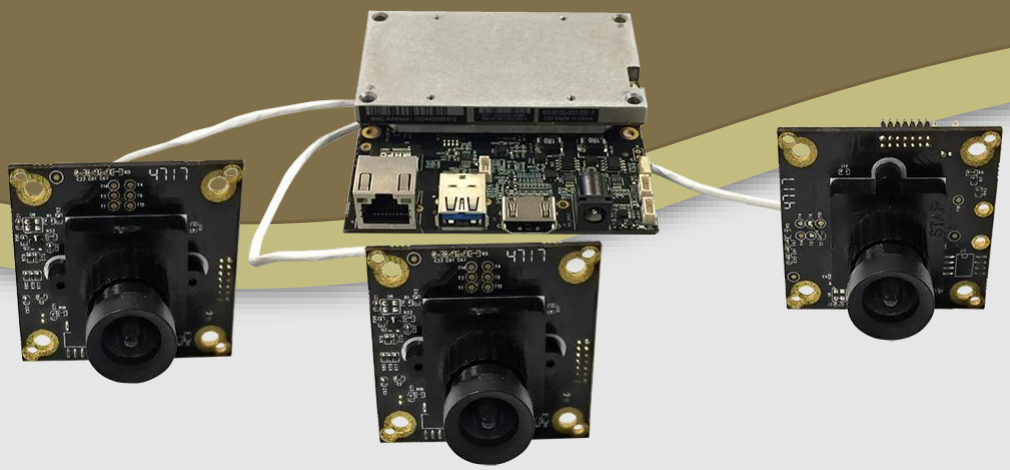

Address:
910 Auburn Ct
Fremont, CA 94538
USA

Phone:
+1 (408)263-0988
Fax:
+1 (408)217-1960

Sales:
sales@leopardimaging.com
Support:
support@leopardimaging.com

KEY FEATURES

- Compatible with Nvidia® Jetson™ TX1 / TX2 (TX1 / TX2 SOM not included)
- MIPI CSI-2 interface
- Supports up to six cameras
- Two carrier board options:

LI-TX1-CB	Includes three 4-lane interfaces Supports 1080P @ 60 fps
LI-TX1-CB-6CAM	Includes six 2-lane interfaces Supports 1080P @ 30 fps

- Sensor: Sony Diagonal 8.58 mm Type 1/1.9 CMOS Image Sensor IMX185LQJ
- Active pixels: 1937 (H) x 1217 (V)
- Pixel size 3.75 x 3.75 µm
- Color camera
- I-PEX cable part#: FAW-1233-03
- Length of the I-PEX cable: ~ 300 mm
- Supports multiple length cables
- MIPI connector part#: 20525-030E-02
- Supports M12 lens
- Allows customization

LENS SPECIFICATIONS

Effective Focal Length	4.2 mm ± 5%
Aperture, F/#	2.5
Field of View (FOV)	82˚ horizontal
Optical Distortion	-1.2%
Relative Illumination	40%
IR Filter	650 nm IR cut filter
Lens Mount	M12 x P0.5

BOM

Nvidia TX1 / TX2 SOM is **NOT** included.

#	Items	QTY
1	LI-TX1-CB or LI-TX1-CB-6CAM	1
2	LI-IMX185-MIPI-M12	1, 2, 3 or 6
3	FAW-1233-03 cable	1, 2, 3 or 6
4	DC 12V power supply	1
5	USB 2.0 Type A - Micro B cable	1

PART NUMBER

1 Cam	LI-JETSON-CB-IMX185M12
2 Cam	LI-JETSON-CB-IMX185M12-D
3 Cam	LI-JETSON-CB-IMX185M12-T
6 Cam	LI-JETSON-CB-IMX185M12-H

BOM DETAILS

LI-JETSON-CB-IMX185M12

#	Items	QTY
1	LI-TX1-CB	1
2	LI-IMX185-MIPI-M12	1
3	FAW-1233-03 cable	1
4	DC 12V power supply	1
5	USB 2.0 Type A - Micro B cable	1

LI-JETSON-CB-IMX185M12-D

#	Items	QTY
1	LI-TX1-CB	1
2	LI-IMX185-MIPI-M12	2
3	FAW-1233-03 cable	2
4	DC 12V power supply	1
5	USB 2.0 Type A - Micro B cable	1

LI-JETSON-CB-IMX185M12-T

#	Items	QTY
1	LI-TX1-CB	1
2	LI-IMX185-MIPI-M12	3
3	FAW-1233-03 cable	3
4	DC 12V power supply	1
5	USB 2.0 Type A - Micro B cable	1

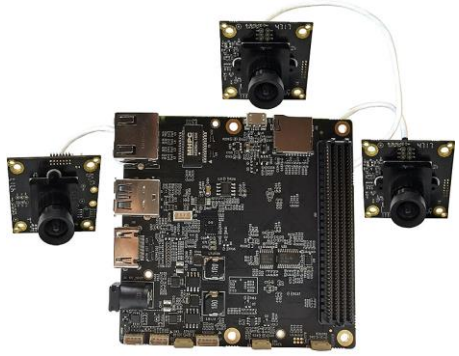

LI-JETSON-CB-IMX185M12-H

#	Items	QTY
1	LI-TX1-CB-6CAM	1
2	LI-IMX185-MIPI-M12	6
3	FAW-1233-03 cable	6
4	DC 12V power supply	1
5	USB 2.0 Type A - Micro B cable	1

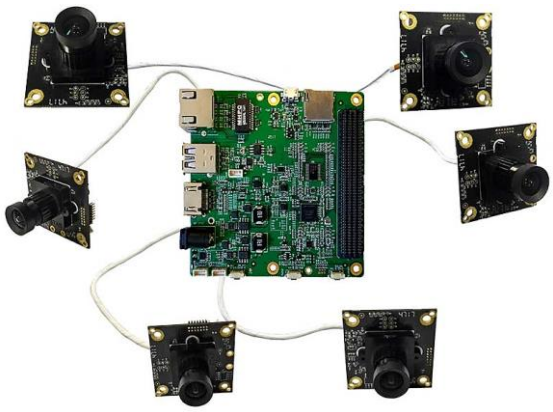

LI-TX1-CB

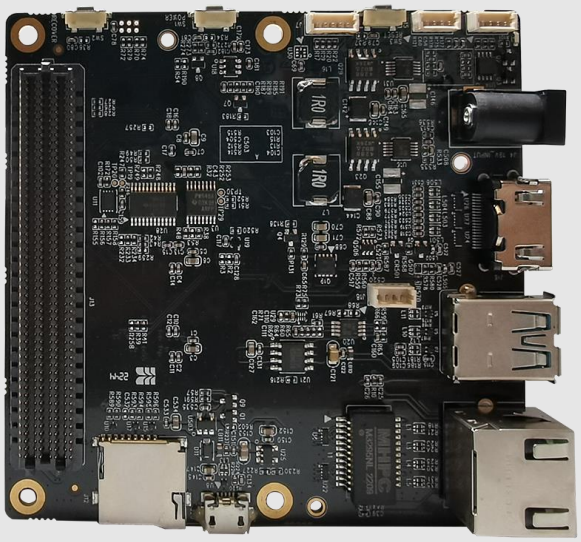

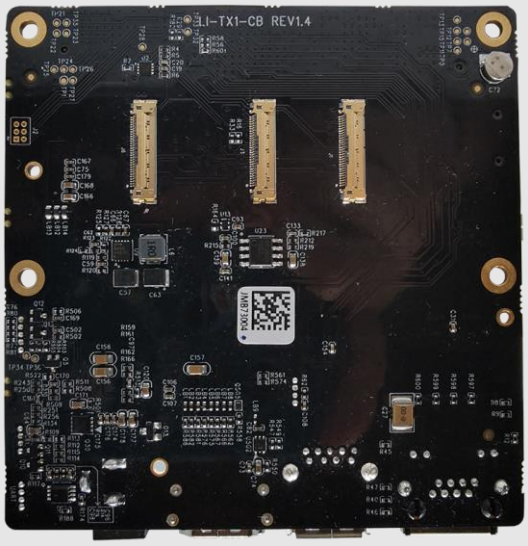

INTERFACES

Interface J1 (MIPI Channel 1)

- Part#: 20525-030E-02
- Number of Positions: 30
- Pitch: 0.4 mm
- Mating I-PEX cable: FAW-1233-03 (300 mm)

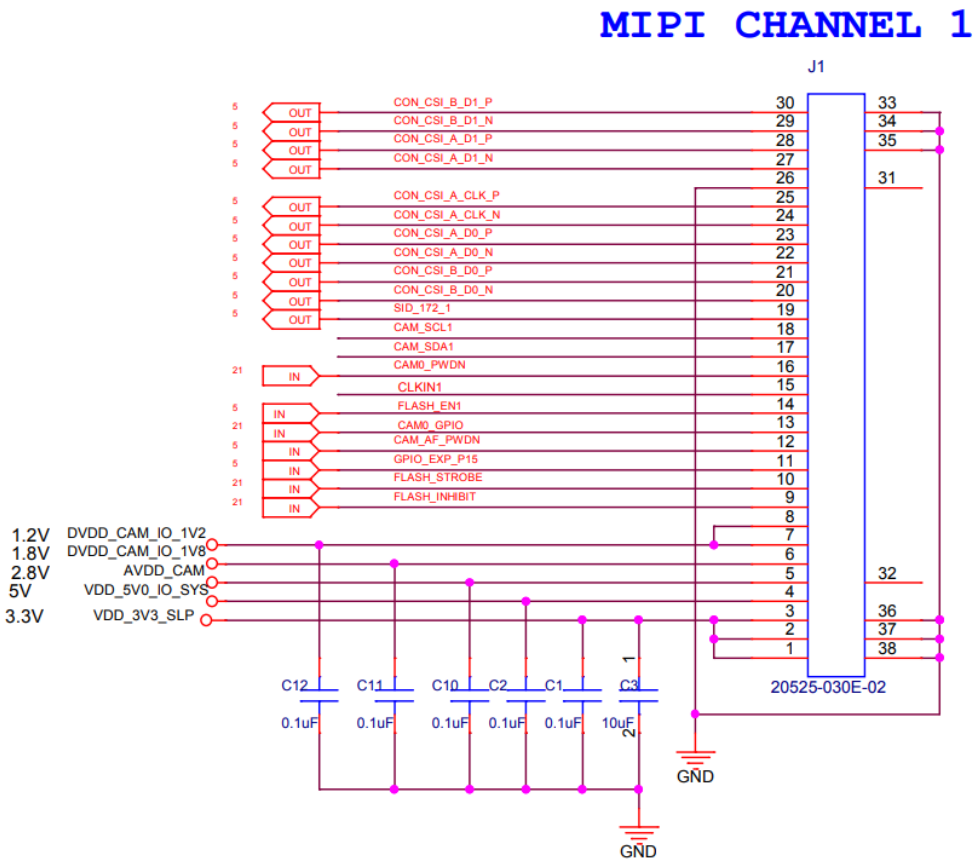

LI-TX1-CB

INTERFACES

Interface J3 (MIPI Channel 2)

- Part#: 20525-030E-02
- Number of Positions: 30
- Pitch: 0.4 mm
- Mating I-PEX Cable: FAW-1233-03 (300 mm)

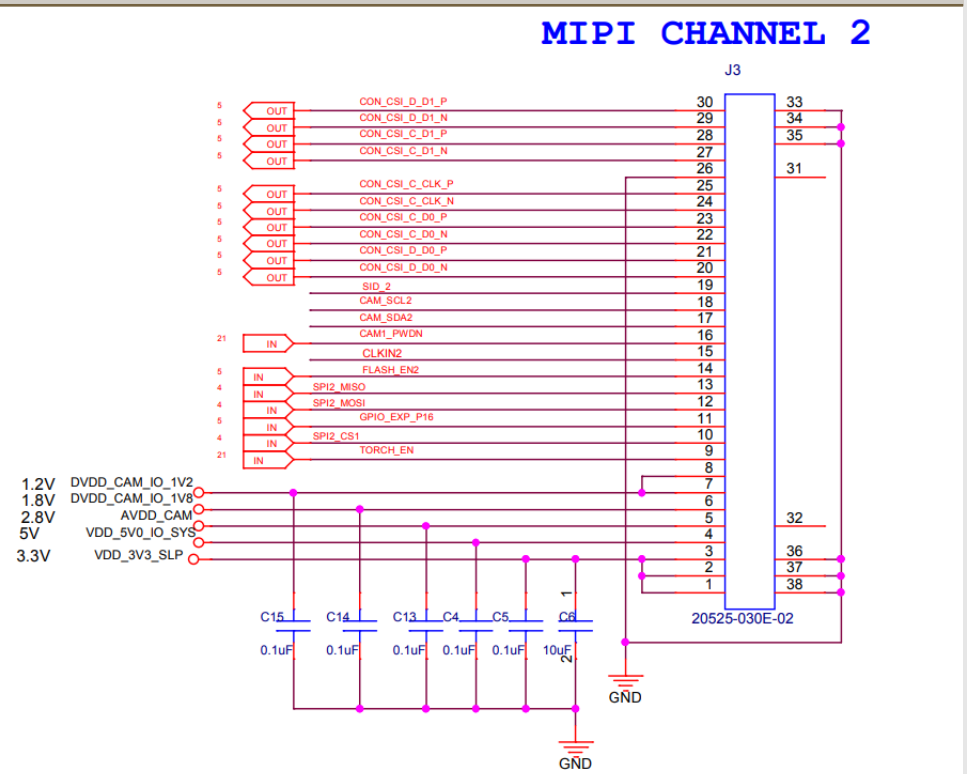

Interface J6 (MIPI Channel 3)

- Part#: 20525-030E-02
- Number of Positions: 30
- Pitch: 0.4 mm
- Mating I-PEX Cable: FAW-1233-03 (300 mm)

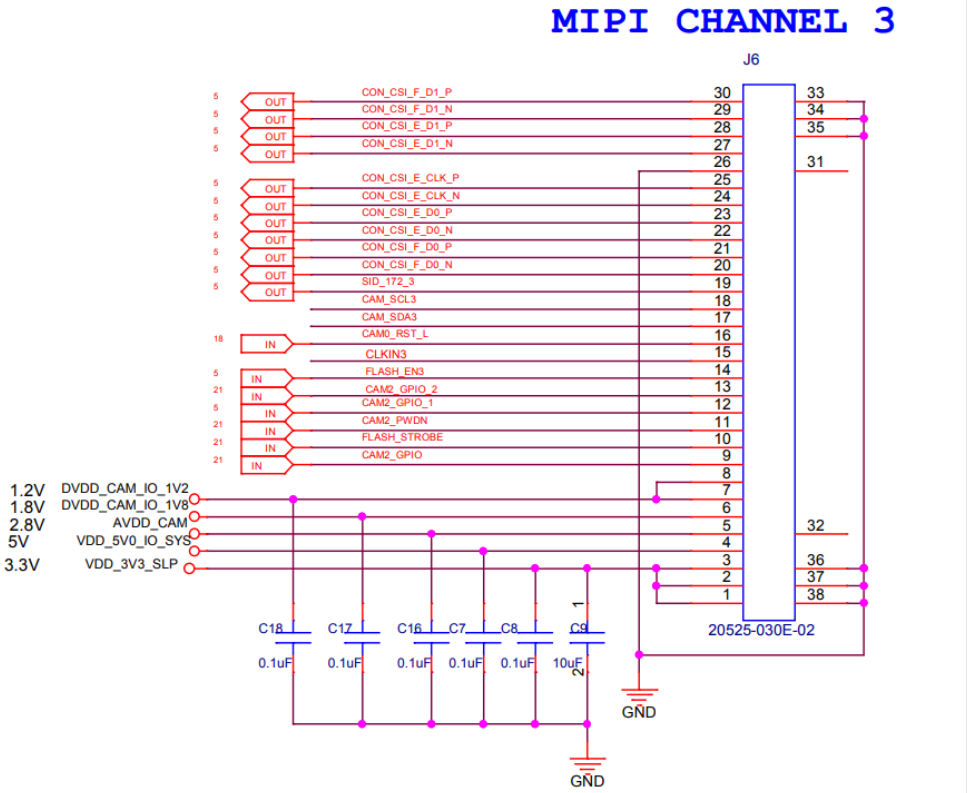

LI-TX1-CB

INTERFACES

Interface J13 (To TX1 / TX2)

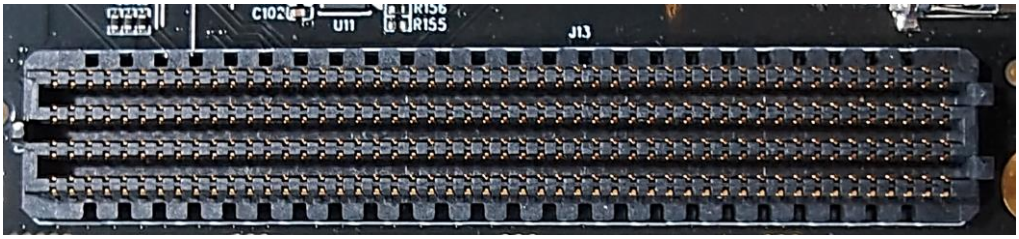

NOTE: NVIDIA® Jetson™ TX1 / TX2 is not included

LI-TX1-CB

DIMENSIONS

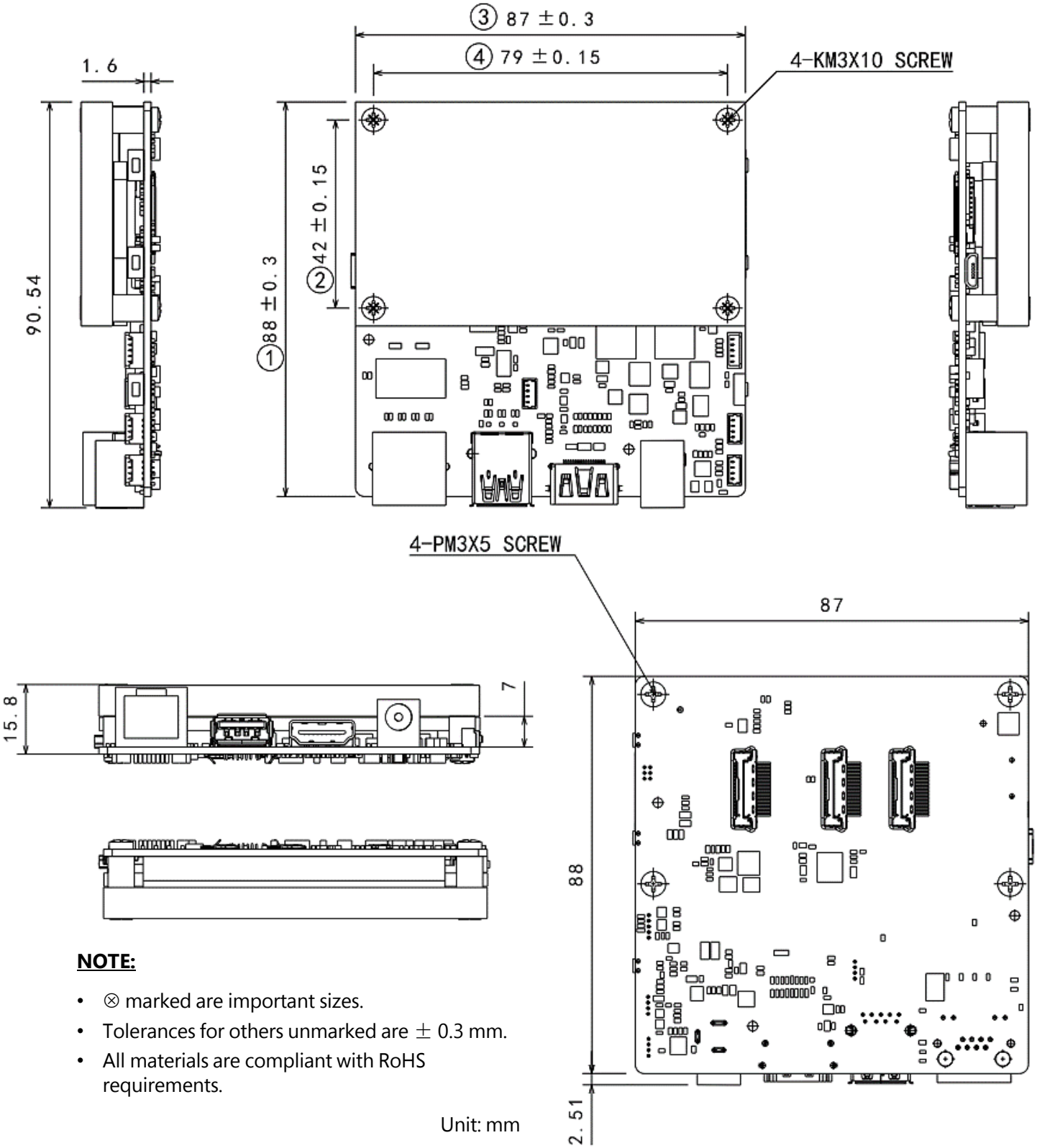

NOTE:

- ⊗ marked are important sizes.
- Tolerances for others unmarked are ± 0.3 mm.
- All materials are compliant with RoHS requirements.

Unit: mm

LI-TX1-CB-6CAM

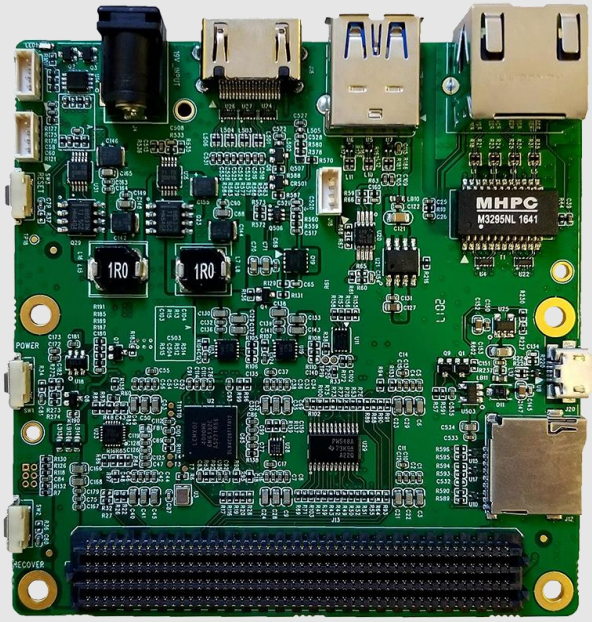

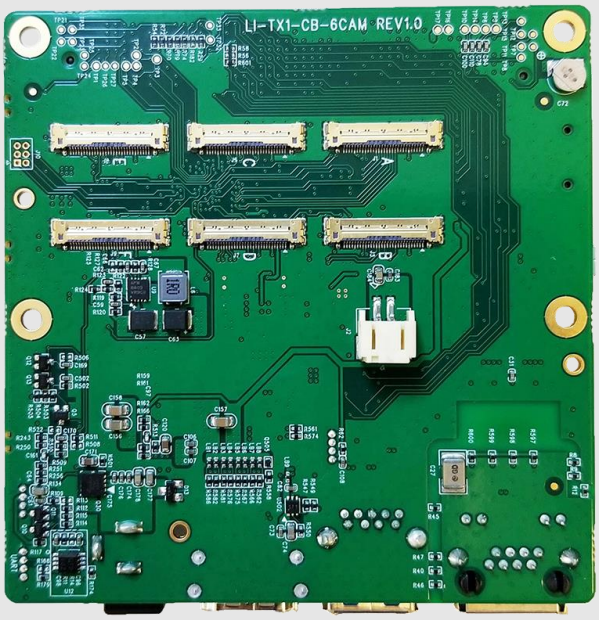

INTERFACES

Interface J1 (Camera Channel A)

- Part#: 20525-030E-02
- Number of Positions: 30
- Pitch: 0.4 mm
- Mating I-PEX cable: FAW-1233-03 (300 mm)

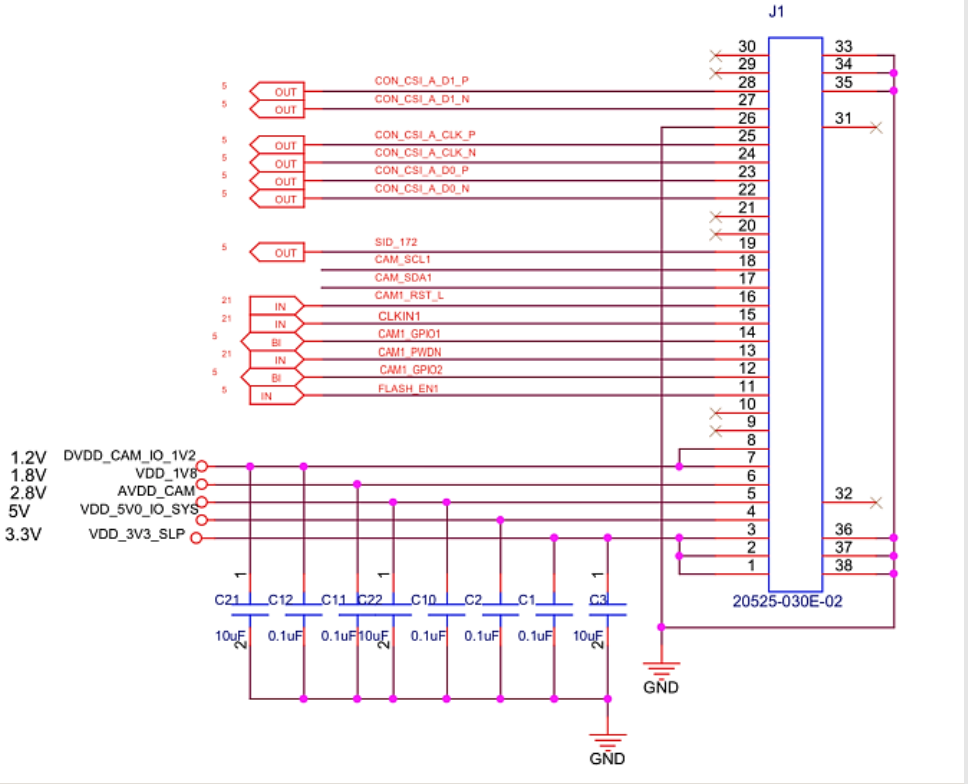

LI-TX1-CB-6CAM

INTERFACES

Interface J3 (Camera Channel B)

- Part#: 20525-030E-02
- Number of Positions: 30
- Pitch: 0.4 mm
- Mating I-PEX Cable: FAW-1233-03 (300 mm)

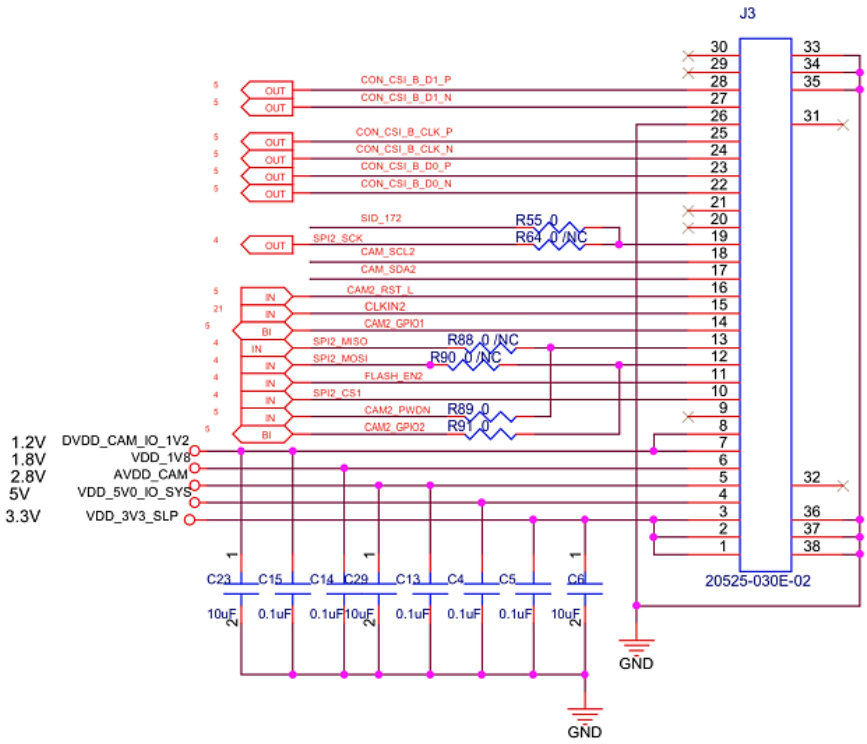

Interface J6 (Camera Channel C)

- Part#: 20525-030E-02
- Number of Positions: 30
- Pitch: 0.4 mm
- Mating I-PEX Cable: FAW-1233-03 (300 mm)

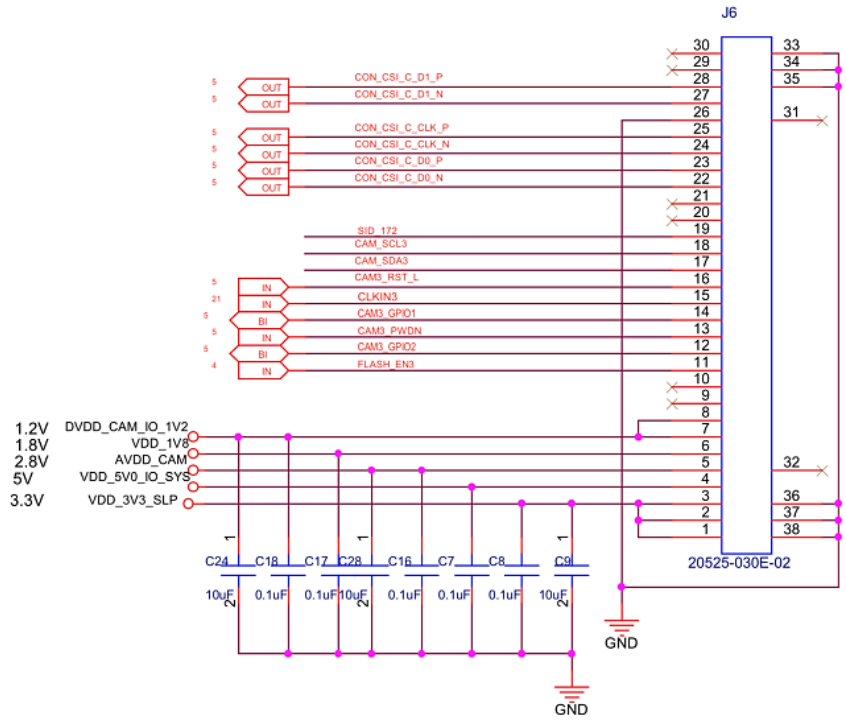

LI-TX1-CB-6CAM

INTERFACES

Interface J7 (Camera Channel D)

- Part#: 20525-030E-02
- Number of Positions: 30
- Pitch: 0.4 mm
- Mating I-PEX Cable: FAW-1233-03 (300 mm)

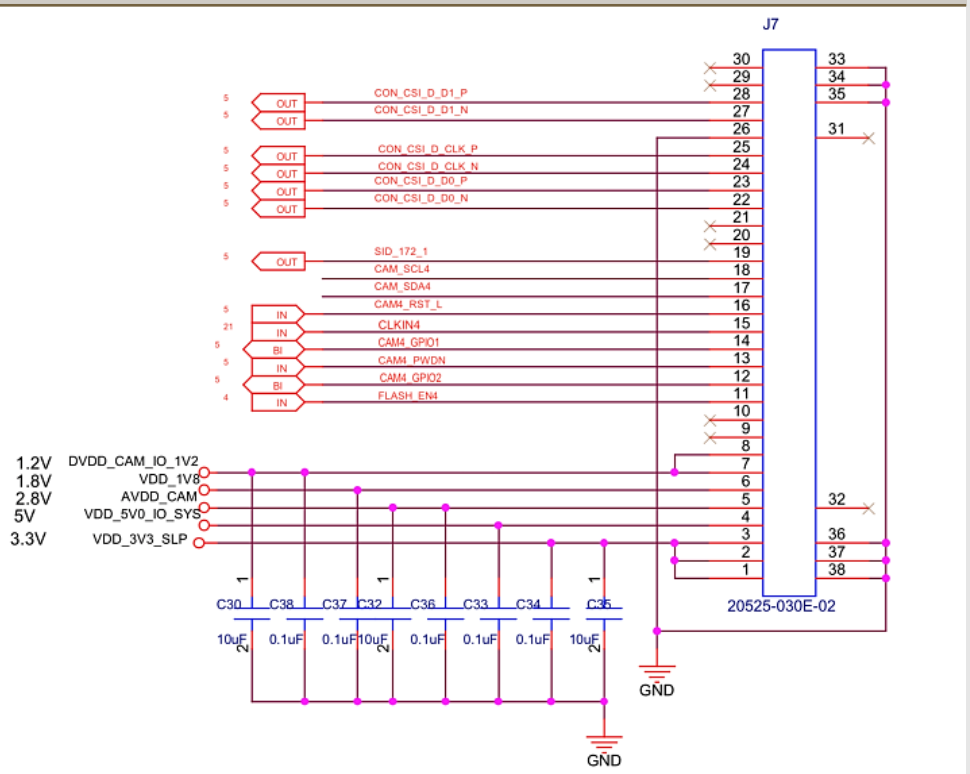

Interface J8 (Camera Channel E)

- Part#: 20525-030E-02
- Number of Positions: 30
- Pitch: 0.4 mm
- Mating I-PEX Cable: FAW-1233-03 (300 mm)

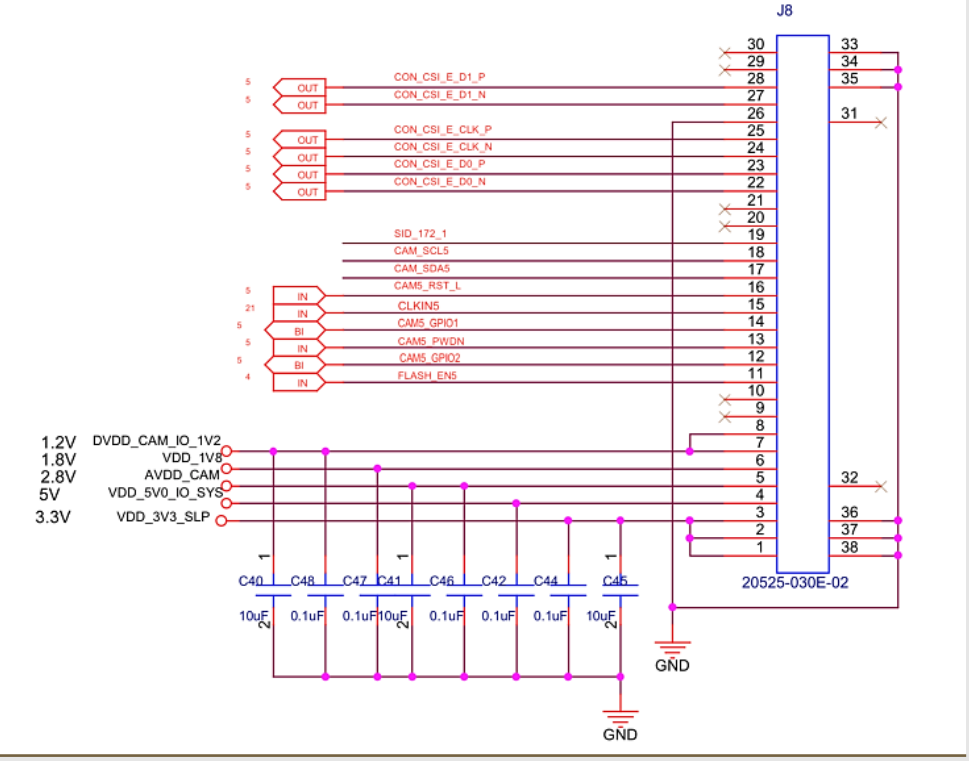

LI-TX1-CB-6CAM

INTERFACES

Interface J9 (Camera Channel F)

- Part#: 20525-030E-02
- Number of Positions: 30
- Pitch: 0.4 mm
- Mating I-PEX Cable: FAW-1233-03 (300 mm)

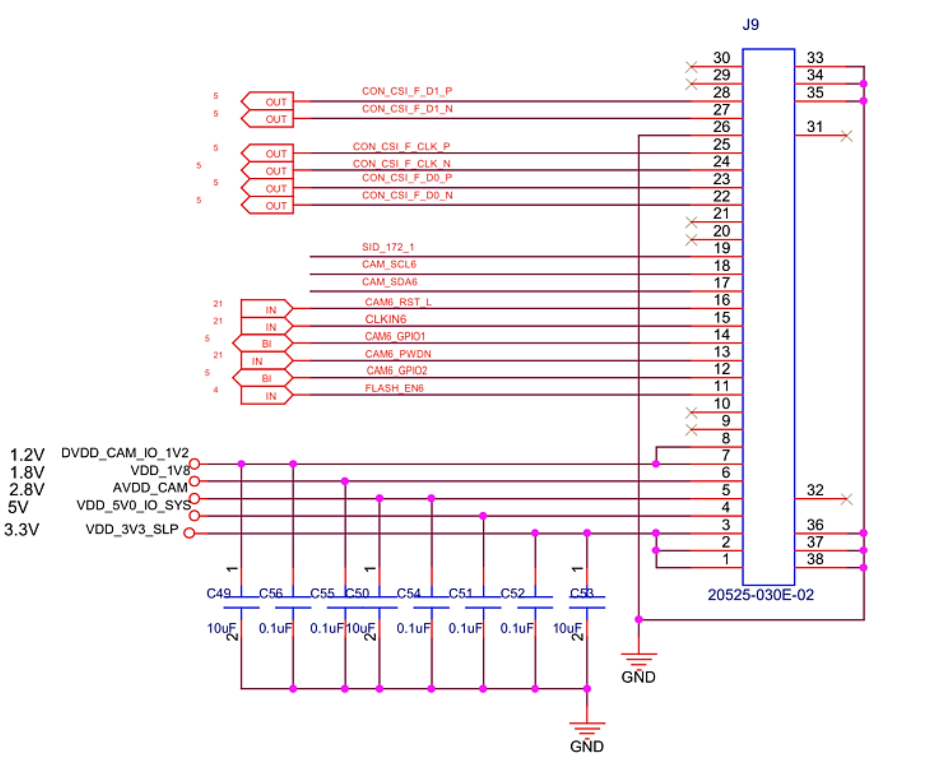

Interface J13 (To TX1 / TX2)

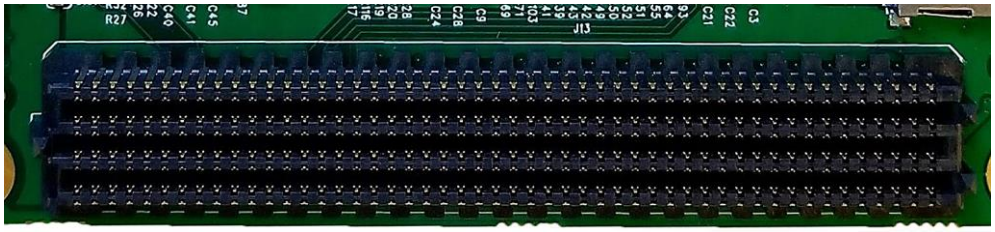

NOTE: NVIDIA® Jetson™ TX1 / TX2 is not included

LI-TX1-CB-6CAM

DIMENSIONS

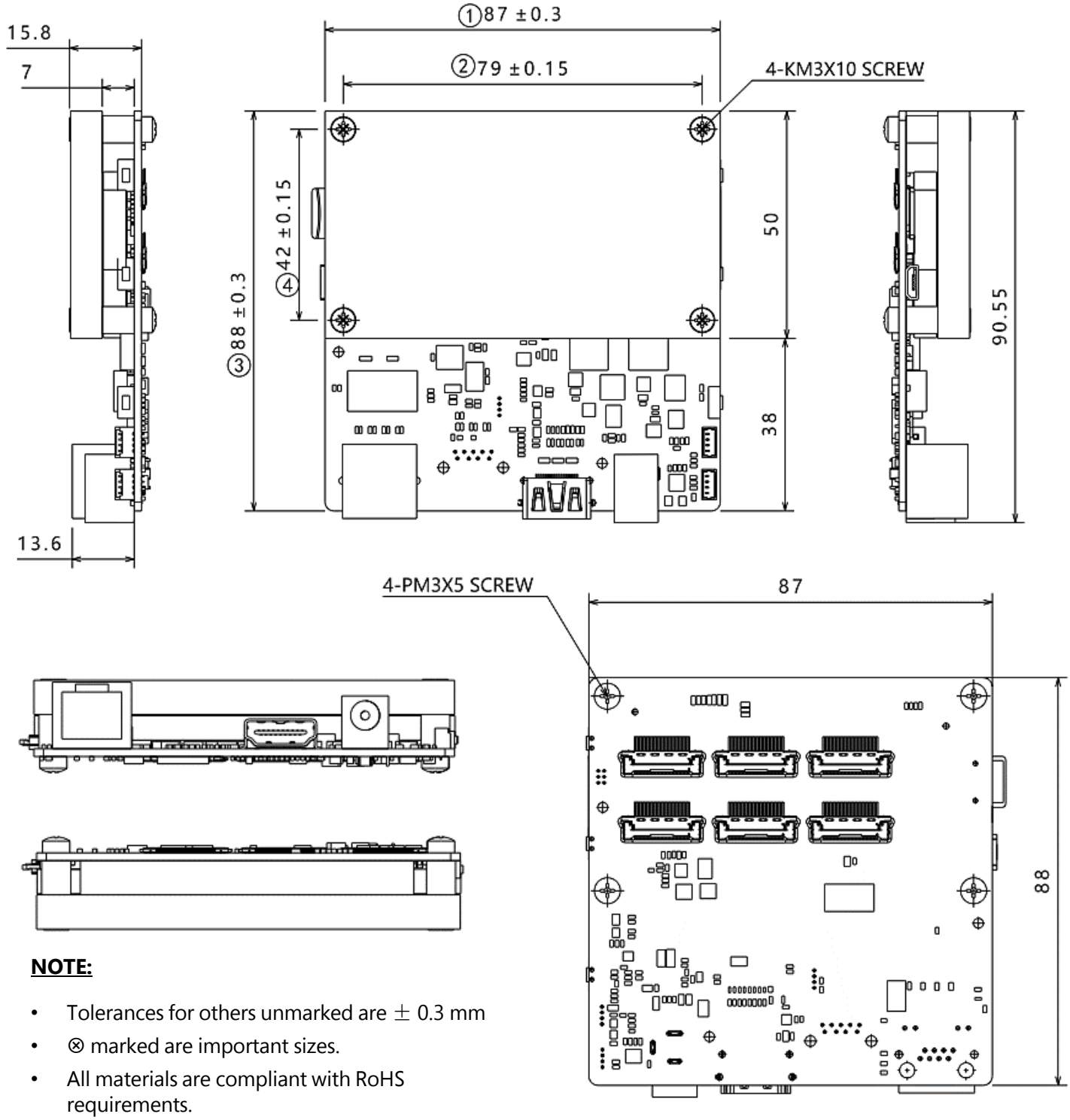

NOTE:

- Tolerances for others unmarked are ± 0.3 mm
- ⊗ marked are important sizes.
- All materials are compliant with RoHS requirements.

Unit: mm

FAW-1233-03 Cable

MECHANICAL DIAGRAM

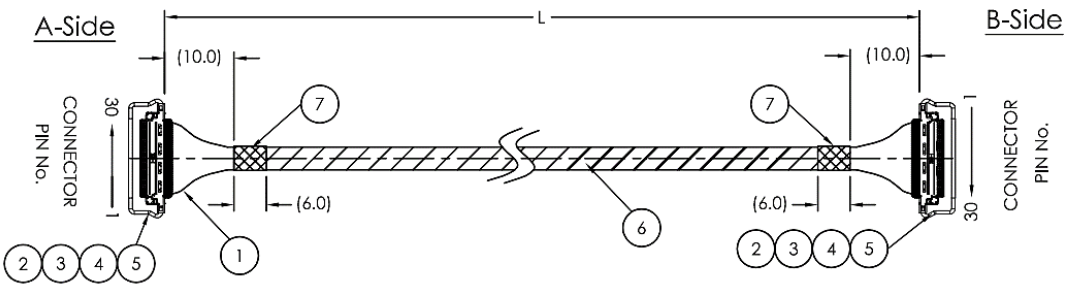

Fig. 1 Applying UV resin

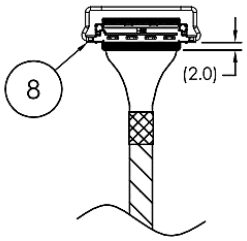

WIRING

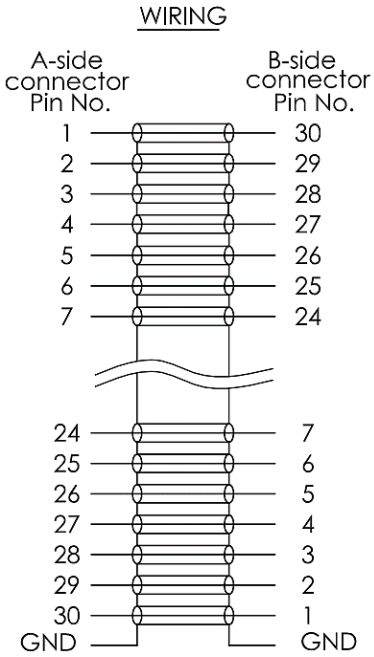

NOTE:

- Total length: 300.0 ± 10.0.

Unit: mm

LI-IMX185-MIPI-M12

CAMERA SPECIFICATIONS

Sensor	Sony Diagonal 8.58 mm Type 1/1.9 CMOS Image Sensor IMX185LQJ
Optical Format	1/1.9"
Resolution	1937 (H) x 1217 (V) (active pixels)
Pixel Size	3.75 x 3.75 µm
Output Format	12-bit / 10-bit RAW data
Maximum Frame Rate	120 fps @ 1080p-HD
ISP	Not included
Color / Mono	Color sensor
Interface	4-lane MIPI CSI-2
Lens Mount	M12
Weight	~ 12 g
Part#	LI-IMX185-MIPI-M12

LI-IMX185-MIPI-M12

INTERFACES

Interface J4

- Connector Part#: 20525-030E-02
- Number of Positions: 30
- Pitch: 0.4 mm
- Mating I-PEX Cable: FAW-1233
- Sensor I2C Address: 0x1A (7-bit)
- External Power Supply: 3.3V, 5.0V
- 3V3, 1V8, 1V2 are generated from board.

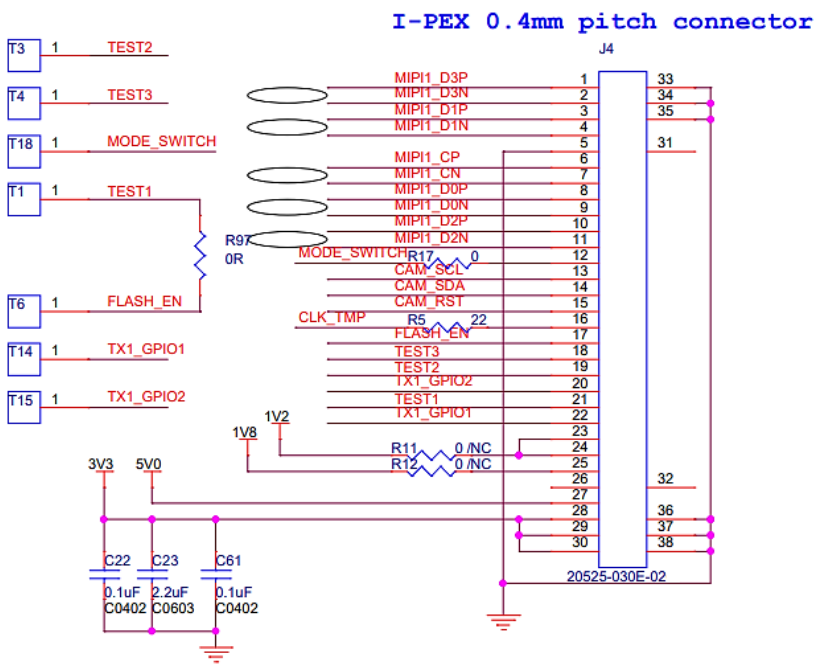

Interface J3 & J6

Interfaces	Description
J3 for IR-Cut switcher (**Not** Used in Default)	■ Part#: 1734829-2 ■ Number of Positions: 2 ■ Pitch: 1.25 mm
J6 for Flash_EN (**Not** Used in Default)	■ Part#: 1734829-2 ■ Number of Positions: 2 ■ Pitch: 1.25 mm

LI-IMX185-MIPI-M12

INTERFACES

Interface J5 (14-Pin Header to Lens Control Board)

- Part#:20021111-00014T4LF
- Number of Positions: 14
- Pitch: 1.27 mm

Pin	Definition
Pin 1, 3, 8, 13, 14	GND
Pin 2, 4	3V3
Pin 5	TX1_GPIO1
Pin 6	1V8
Pin 7	TEST1
Pin 9	TEST2
Pin 10	CAM_SCL_3V3
Pin 11	TEST3
Pin 12	CAM_SDA_3V3

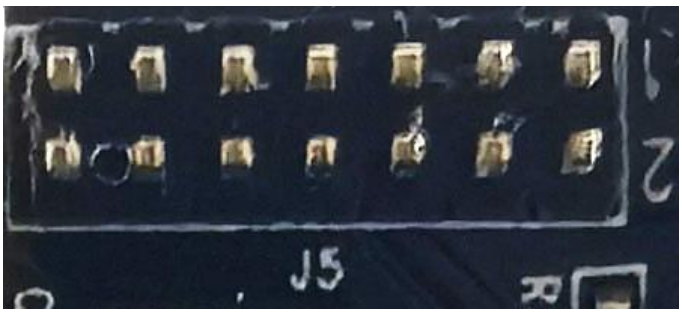

Dip Switch for Mode Selection

- Two modes: Master (default) and Slave.

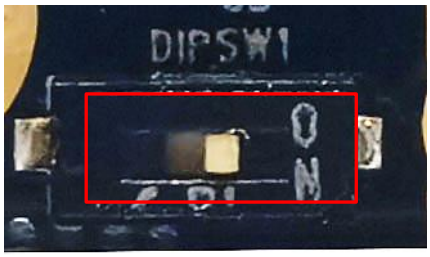

Master mode by default

LI-IMX185-MIPI-M12

DIMENSIONS

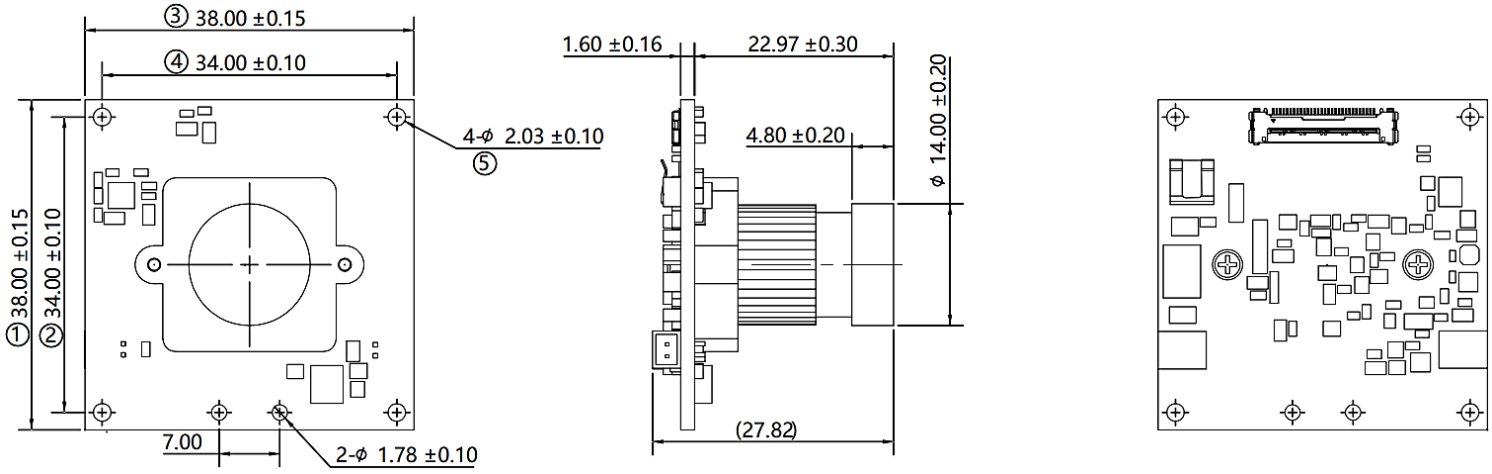

TOLERANCE TABLE					
LENGTH TOLERANCE		CHAMFER TOLERANCE		ANGLE TOLERANCE	
Size X	Tolerance	Size X	Tolerance	Size X	Tolerance
0.5 < X≤3	±0.1	0.5 < X≤3	±0.2	X≤10	±1°
3 < X≤6	±0.1	3 < X≤6	±0.5	10 < X≤50	±30'
6 < X≤30	±0.2	6 < X≤30	±1	50 < X≤120	±20'
30 < X≤120	±0.3	X > 30	±2	120 < X≤400	±10'
120 < X≤400	±0.5			X > 400	±5'
400 < X≤1000	±0.8				
X > 1000	±1.2				

NOTE:

- ⊗ marked are important sizes.
- Tolerances for the unmarked – refer to the Tolerance table.
- All materials are compliant with RoHS & REACH requirements.

Unit: mm

REVISION HISTORY

Revision	Description	Release Date
1.0	First release.	15 Dec 2020
1.1	Deleted info quoted from sensor spec.	23 May 2022
1.2	Deleted lens model info and updated pics for LI-TX1-CB.	25 Jul 2023
1.3	1. Replaced old format with current format. 2. Updated lens info and related pics, 2D, and weight. 3. Added interface J13 for LI-TX1-CB and LI-TX1-CB-6CAM	18 Dec 2023

910 Auburn Ct, Fremont, CA 94538, USA
Phone: +1-408-263-0988
Fax: +1-408-217-1960
Email: sales@leopardimaging.com
Website: www.leopardimaging.com

Leopard Imaging Inc.