# LI-AR0144-MIPI-CS
# Data Sheet

Rev. 1.2

## Key Features

- ON Semiconductor CMOS Image Sensor AR0144
- Active pixels: 1280 (H) x 800 (V)
- Pixel size: 3.0 x 3.0 µm
- Optical format: 1/4"
- Interface: MIPI output
- Supports CS lens
- Global Shutter
- Weight: ~ 54 g
- Part#: LI-AR0144-MIPI-CS

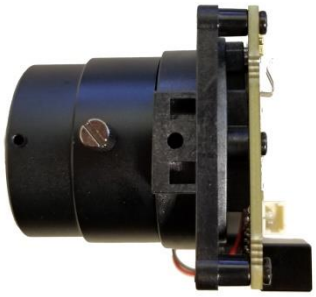

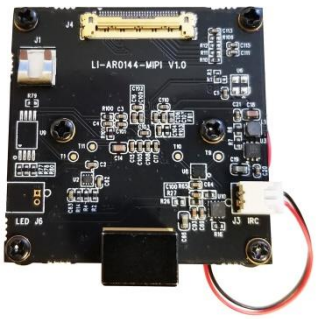


## Lens Spec

- Focal Length: 5.0 mm
- Aperture, F/#: 2.2
- FOV (D / H / V): 56.5° / 50° / 28.5°
- TV Distortion: < -8%
- Mount Type: CS

## Dimensions

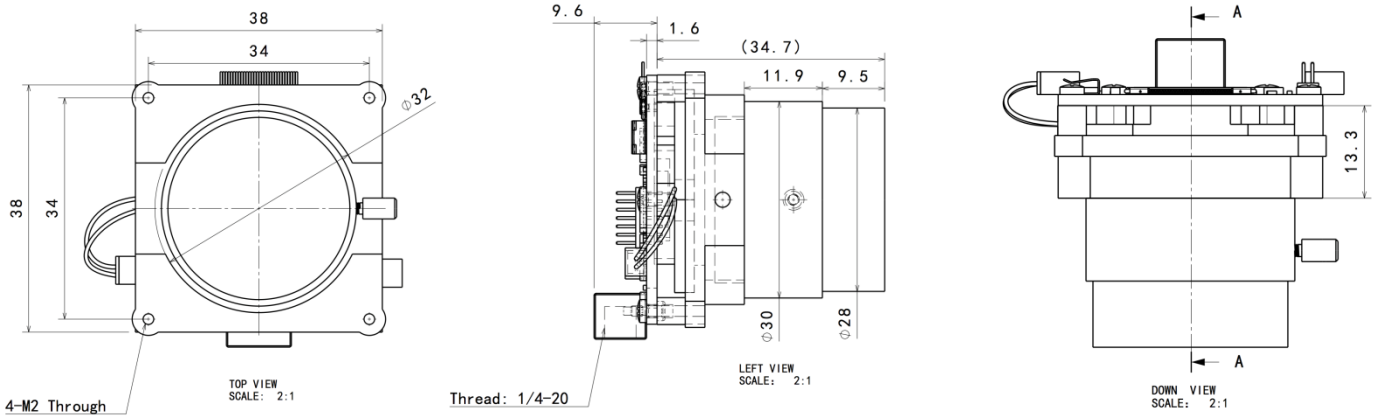


Leopard Imaging Inc.

910 Auburn Ct, Fremont, CA 94538 USA
Phone: +1-408-263-0988
Fax: +1-408-217-1960
Email: sales@leopardimaging.com
Website: www.leopardimaging.com

## Interfaces

| Interfaces | |
|---|---|
| Interface J4:<br>▪ Part#: 20525-030E-02C<br>▪ Number of Positions: 30<br>▪ Pitch: 0.4 mm<br>▪ Mating I-PEX cable: FAW-1233 | 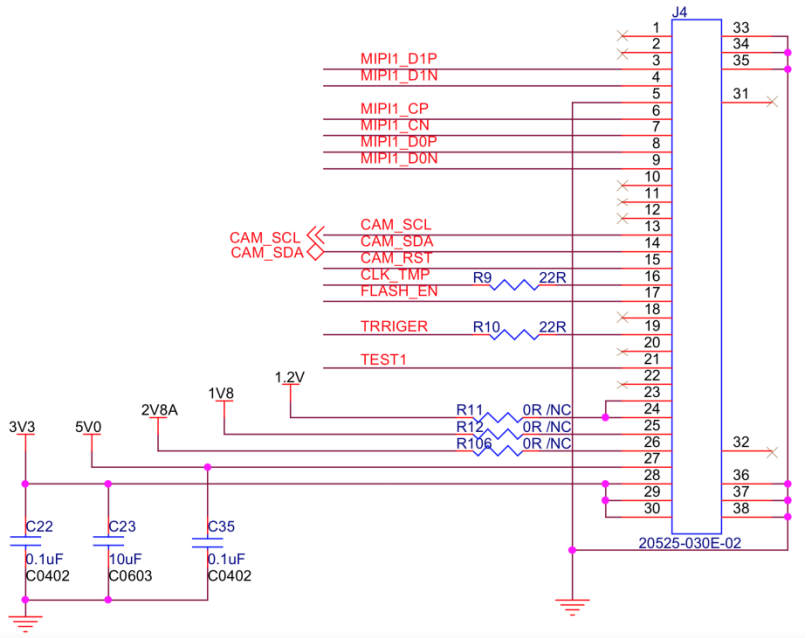 |
| Interface J3:<br>▪ Part#: 1734829-2<br>▪ Number of Positions: 2<br>▪ Pitch: 1.25 mm | 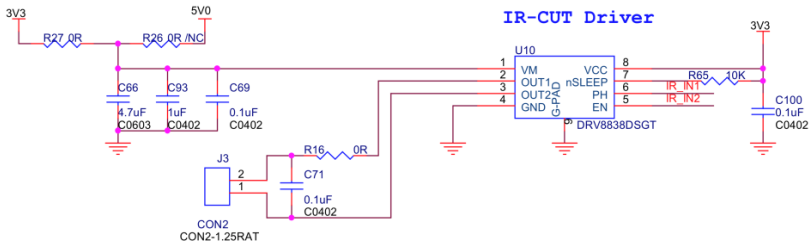 |
| Interface J6:<br>▪ Part#: 1734829-2<br>▪ Number of Positions: 2<br>▪ Pitch: 1.25 mm | 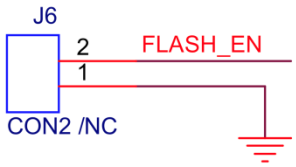 |

Leopard Imaging Inc.

910 Auburn Ct, Fremont, CA 94538 USA
Phone: +1-408-263-0988
Fax: +1-408-217-1960
Email: sales@leopardimaging.com
Website: www.leopardimaging.com

# 10 Megapixel IR Series

| | | | |
|---|---|---|---|
| 有效焦距 | E.F.L. | | 5 mm |
| 相对孔径 | F No. | | F2.2 |
| 接口类型 | Mount Type | | CS |
| 水平视角 | H.FOV | 1/1.8” | 72° |
| 像面尺寸 | Image Format (Max) | | 1/1.8” |
| 光圈类型 | Iris Type | | Fixed |
| 近 摄 距 | M.O.D | | 0.3m |
| 畸 变 | TV Distortion | 1/1.8” | -8% |
| 操控方式 | Control Type | 变倍 Zoom | / |
| | | 聚焦 Focus | Manual |
| 工作温度 | Operating Temperature | | -30℃ ~ 70℃ |
| 镜头重量 | Weight | | 39g |
| 尺寸规格 | Dimensions | | |

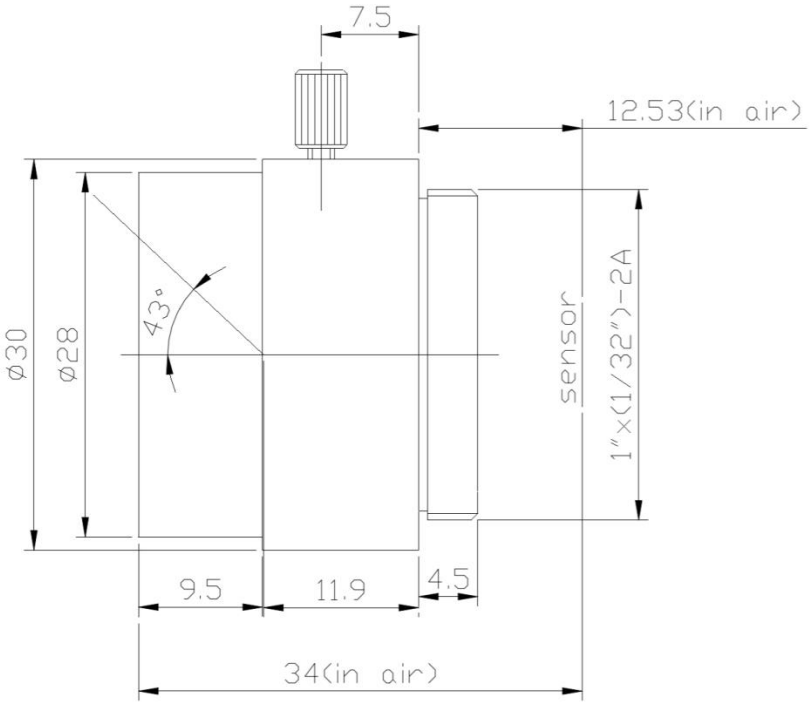


Leopard Imaging Inc.

910 Auburn Ct, Fremont, CA 94538 USA
Phone: +1-408-263-0988
Fax: +1-408-217-1960
Email: sales@leopardimaging.com
Website: www.leopardimaging.com

# GS5B-38S

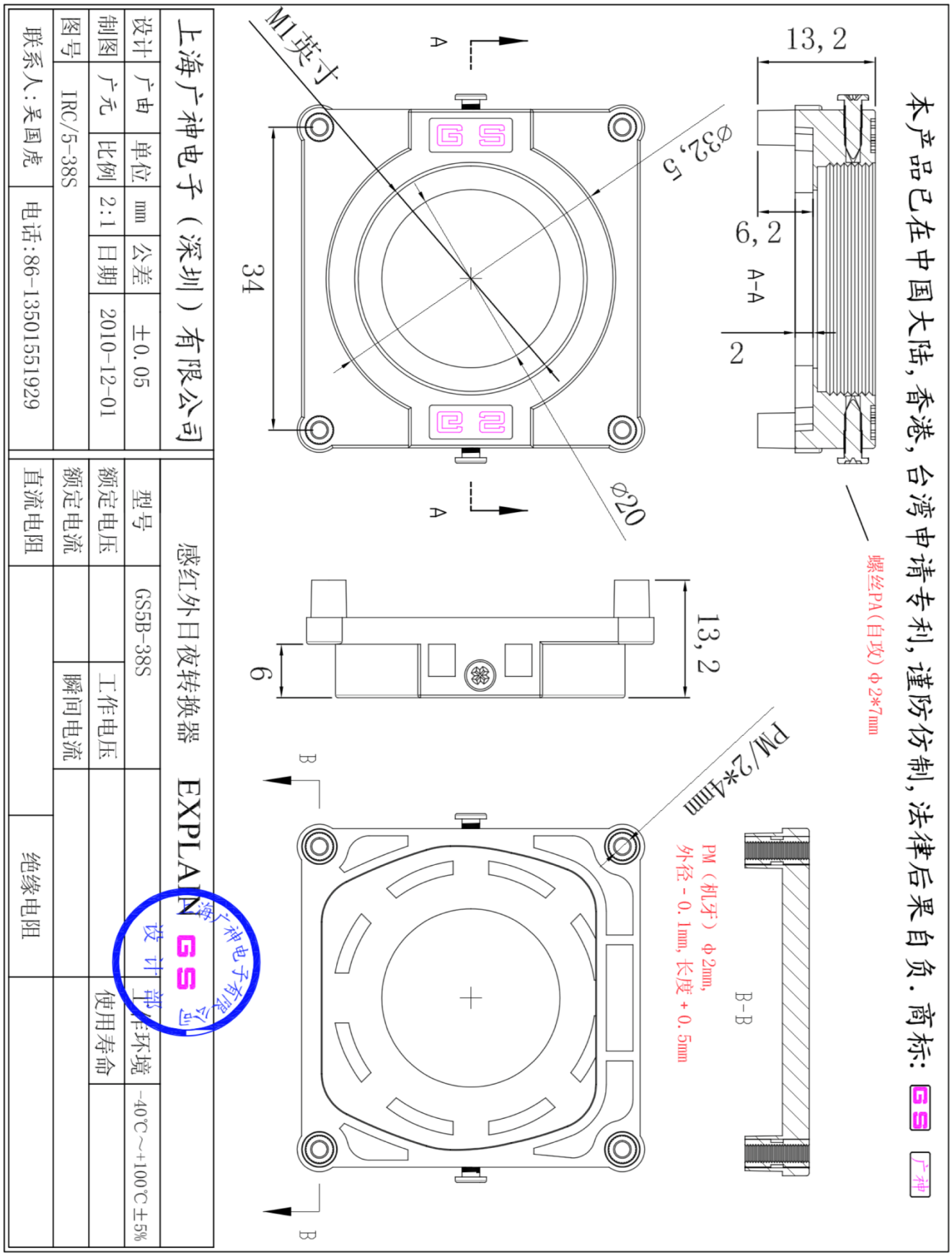



Leopard Imaging Inc.

910 Auburn Ct, Fremont, CA 94538 USA
Phone: +1-408-263-0988
Fax: +1-408-217-1960
Email: sales@leopardimaging.com
Website: www.leopardimaging.com

# IRC5B-2230-CS

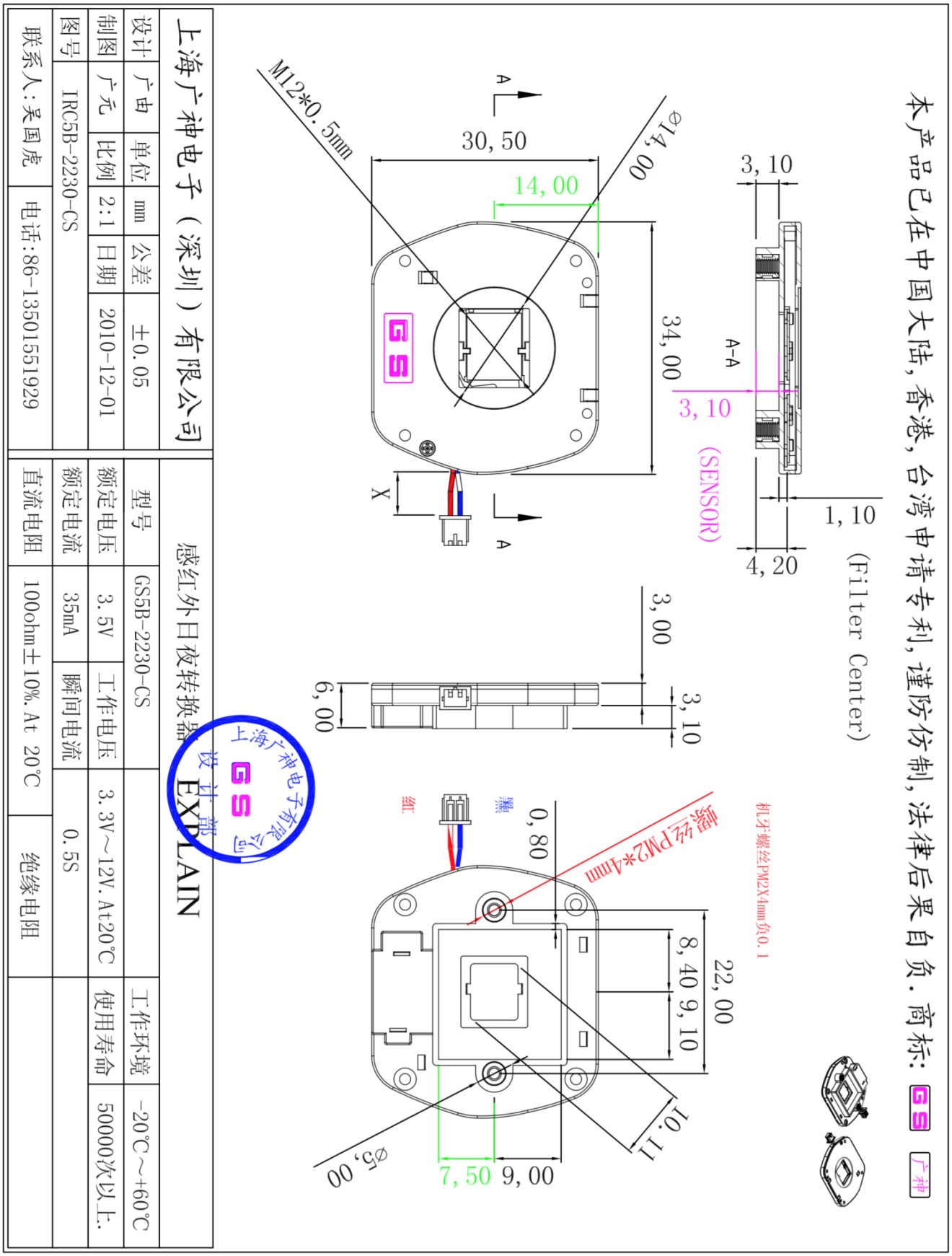



Leopard Imaging Inc.

910 Auburn Ct, Fremont, CA 94538 USA
Phone: +1-408-263-0988
Fax: +1-408-217-1960
Email: sales@leopardimaging.com
Website: www.leopardimaging.com

## Revision History

| Revision | Description | Release Date |
|---|---|---|
| 1.0 | First release. | 15. Dec. 2020 |
| 1.1 | Deleted info quoted from sensor spec. | 26. May. 2022 |
| 1.2 | Updated lens. | 24. Jul. 2023 |


910 Auburn Ct, Fremont, CA 94538 USA
Phone: +1-408-263-0988
Fax: +1-408-217-1960
Email: sales@leopardimaging.com
Website: www.leopardimaging.com